THE FINANCIAL BEHAVIOR OF EMERGING ADULTS: A FAMILY FINANCIAL SOCIALIZATION APPROACH

By

John T. Schweichler

April, 2013

Director of Thesis: Bryce L. Jorgensen, Ph. D.

DEPARTMENT OF CHILD DEVELOPMENT AND FAMILY RELATIONS

The present study examined the role of attachment insecurity, locus of control, and parental financial communication in the financial behavior of emerging adults from a family financial socialization theory perspective. The sample consisted of 348 emerging adult college students (226 female) from a large southeastern university. Structural equation modeling was utilized to examine the direct and indirect effects as well as the overall fit of the model that was constructed according to family financial socialization theory. Results indicated a mediated relationship between attachment insecurity and financial behavior with significant indirect effects (β= -.717, p<.001). Direct effects of attachment insecurity on the mediating variables, locus of control (β= -.956, p<.01) and financial communication (β= -.380, p<.001) were significant. Significant positive effects from locus of control (β= .615, p<.001) and financial communication (β= .338, p<.001) on financial behavior were also found. Overall fit of the model was good (CFI=.971, TLI=.953, RMSEA=.050, SRMR=.049). The findings support the inclusion of attachment as an important family relationship variable in the financial socialization process. The results also support the structure of a conceptual model of family financial socialization theory. Implications for research and practice are discussed.

THE FINANCIAL BEHAVIOR OF EMERGING ADULTS: A FAMILY FINANCIAL SOCIALIZATION APPROACH

A Thesis

Presented to the Faculty of the Department of Child Development and Family Relations

East Carolina University

In Partial Fulfillment of the Requirements for the Degree

Master of Science in Marriage and Family Therapy

by

John T. Schweichler

April 2013

THE FINANCIAL BEHAVIOR OF EMERGING ADULTS: A FAMILY FINANCIAL SOCIALIZATION APPROACH

by

John T. Schweichler

APPROVED BY:

DIRECTOR OF THESIS: _____
Bryce Jorgensen, PhD

COMMITTEE MEMBER: _____
Damon Rappleyea, PhD

COMMITTEE MEMBER: _____
Xiangming Fang, PhD

INTERIM CHAIR OF THE DEPARTMENT OF CHILD DEVELOPMENT AND FAMILY RELATIONS:
_____
Sharon Ballard, PhD

DEAN OF THE
GRADUATE SCHOOL: _____
Paul J. Gemperline, PhD

DEDICATION

This thesis is dedicated to my grandmother, Helen C. Anderson, who passed away during the first few weeks of my master's education after a short battle with a brain tumor. She was the bedrock of my family and we miss her terribly. However, the foundation she built remains strong, her light continues to shine, and her torch is carried on.

I would also like to dedicate this thesis to my late fourth grade teacher, Mrs. Linda DiLiberto Clements, who saw the light in me even when I lost sight of it. She inspired me to believe in myself and in my potential. It has been nearly 15 years since she was my teacher and since her passing, but I carry her inspiration with me every day.

Some people come into our lives
and leave footprints on our hearts
and we are never ever the same.

They help us become aware
of the delicate winds of hope…
and we discover within every human spirit
there are wings yearning to fly

They celebrate the true essence
of who we are…
and have faith in all
that we may become

Throughout our lives we are sent
precious souls…
meant to share in our journey
however brief or lasting their stay
they remind us why we are here.

To learn…to teach…to nurture…to love

-Excerpt from the poem "Some People" by Flavia Weedn

ACKNOWLEDGMENTS

I thank all the members of my thesis committee who have each made their own substantial and unique contributions to the completion of this project and my development as a writer and researcher. They have committed many hours to supporting me and I am forever grateful for their dedication. Yet my committee has also had the courage to allow me to learn independently through experience. Admittedly, I struggled at times with this independence but the confidence my committee showed in my ability to overcome never wavered. In the end, I believe I learned more and am more confident because of the hurdles I overcame.

First, I would like to extend my deep gratitude to Dr. Bryce Jorgensen who has been an excellent committee chair, mentor, and partner in research. I know that I learned a great deal through this process because of Bryce and I am grateful for the opportunity to work with him. He has challenged me to expand my academic and professional skills, while soaking up the knowledge available to me along the way. I know these experiences will prove invaluable as I move into doctoral education. I am grateful to Bryce for never giving up on me and challenging me to reach higher.

I would also like to thank Dr. Damon Rappleyea whose early confidence and faith in my abilities, inspired me to pursue a thesis. His perseverant confidence sustained me as I took my "first steps" with structural equation modeling. Damon has been the ultimate mentor because he has always believed in and supported me through the more difficult parts of my thesis, all the while continuing to hold me to a high standard. I am forever grateful to Damon for seeing in me what I didn't yet see in myself and then making the commitment to help me grow.

Dr. Xiangming Fang was a critical member of my committee. As I began utilizing structural equation modeling—something I had no prior training with—he was an incredible

resource of information and support. I am very grateful to Xiangming for being so patient with me as I endeavored to understand these new concepts.

I also extend my gratitude to the faculty of the marriage and family therapy program. Their early support of my decision to complete a thesis and their subsequent guidance were invaluable. Their support came in the midst of a challenging year when many students were pursuing a thesis. The faculty had the courage and endurance to take on the burden of so many research projects because they put the development and success of their students first. I thank them for that commitment.

Lastly, I must thank my family. All the things I accomplish now and in the future are because of the strong foundation they built for me. Their love sustains me and they continue to be my biggest supporters. I wouldn't be where I am today without you.

TABLE OF CONTENTS

LIST OF TABLES

LIST OF FIGURES

PREFACE

This thesis is focused on the processes and outcomes of financial socialization within the emerging adult population. At the beginning of this project, I was new to this area of study and quite naïve to its relevance to the field of family and human development. However as I discovered the literature and entered clinical practice as a Marriage and Family Therapist, I came to realize that financial matters are an important topic within many families and is worthy of greater understanding within the larger fields of human development and family relations. It is my hope that this research can contribute to the rich and ever-growing family development literature and inform the practice of professionals within the financial and family relations fields.

CHAPTER 1: INTRODUCTION

The world economy is only just beginning a fragile recovery from the worst economic decline since the Great Depression. In the United States, 12 million people remain unemployed and another eight million are employed part-time involuntarily (Bureau of Labor Statistics, 2013). The dire and complicated financial circumstances that some individuals face require a strong knowledge of personal finance to effectively navigate.

Unfortunately, financial knowledge is lacking among Americans (Lusardi, 2011). It is particularly pronounced among the 18-30 year old population. According to the JumpStart Coalition, financial knowledge declined among young Americans from 1997 to 2008 (Mandell, 2008). In a more recent administration of the JumpStart survey to college students, knowledge of personal finance remained inadequate with an average score of 57.6% (Jorgensen & Savla, 2010).

Individuals in their late teens and twenties, particularly those who pursue higher education, represent a stage in development with unique challenges. Arnett (2000) described this stage as "emerging adulthood" which is distinct from both adolescence and young adulthood. Further, Arnett notes that emerging adulthood in industrialized societies is "a period characterized by change and exploration for most people, as they examine the life possibilities open to them and gradually arrive at more enduring choices in love, work, and worldviews" (p.479). Among the primary goals of this stage of development is the attainment of financial independence (Arnett, 2001; Petrogiannis, 2011; Sirsch, Dreher, Mayr, & Willinger, 2009). However, achieving financial independence requires the development of sound financial practices.

There has been increasing interest among researchers regarding the processes that impact the development of financial behavior and well-being (Gudmunson and Danes, 2011). Traditionally, efforts to improve financial outcomes have focused on the delivery of financial knowledge to individuals. However, the field has evolved to view financial outcomes as the result of a socialization process that occurs throughout the lifespan. Financial socialization goes beyond financial knowledge to include factors such as attitudes, beliefs, roles, skills, and values (Danes, 1994).

In considering the early processes of financial socialization, one must consider the family as the primary socialization vehicle. Research in the field of family financial socialization has been quite diverse, yet Gudmunson and Danes (2011) summarized the literature and developed a comprehensive general conceptual model of the various processes and pathways leading to financial outcomes. The authors concluded that more research is needed into the mediating processes of socialization that lead to financial outcomes. Additionally, Gudmunson and Danes called for increased focus on the processes of socialization rather than outcomes. To this end, the current study examines the mediated pathway from family relationship quality, through purposive financial socialization and financial capability, to financial behavior. The current study is also the first to use structural equation modeling to assess overall fit of the model to the sample data.

This master's thesis is divided into four additional chapters. The next chapter (Chapter 2) provides a review of the literature relevant to the current study and details the need for it. Chapter three details the methodology in terms of study design and modes of analysis. Chapter four reports the results obtained from the analysis. Lastly, chapter five discusses the reported results, limitations of the current study, and implications for research and professional practice.

REFERENCES

Arnett, J. (2000). Emerging adulthood: A theory of development from the late teens through the twenties. *American Psychologist*, *55*(5), 469-480. doi:10.1037/0003-066X.55.5.469

Arnett, J. (2001). Conceptions of the transition to adulthood: Perspectives from adolescence through midlife. *Journal of Adult Development*, *8*(2), 133-143.

Bureau of Labor Statistics. (2013). *The employment situation summary—February 2013* (USDL-13-0389). Washington, DC: Author.

Danes, S. M. (1994). Parental perceptions of children's financial socialization. *Financial Counseling and Planning*, *5*, 127–149.

Gudmunson, C. G., & Danes, S. M. (2011). Family financial socialization: Theory and critical review. *Journal of Family and Economic Issues*, *32*(4), 644-667. doi:10.1007/s10834-011-9275-y

Jorgensen, B. L., & Savla, J. (2010). Financial literacy of young adults: The importance of parental socialization. *Family Relations*, *59*(4), 465-478. doi:10.1111/j.1741-3729.2010.00616.x

Lusardi, A. (2011). *Americans' financial capability* (NBER Working Paper No. 17103). Retrieved from the National Bureau of Economic Research website: http://papers.nber.org/papers/w17103

Mandell, L. (2008). The financial literacy of young American adults: Results of the 2008 national JumpStart coalition survey of high school seniors and college students. Retrieved from JumpStart Coalition for Personal Financial Literacy website: http://www.jumpstartcoalition.org/upload/2009BookcompleteafterLewEdits.pdf.

Petrogiannis, K. (2011). Conceptions of the transition to adulthood in a sample of Greek higher education students. *International Journal of Psychology & Psychological Therapy*, *11*(1), 121-137.

Sirsch, U., Dreher, E., Mayr, E., & Willinger, U. (2009). What does it take to be an adult in Austria: Views of adulthood in Austrian adolescents, emerging adults, and adults. *Journal of Adolescent Research, 24*(3), 275-292. doi: 10.1177/0743558408331184

CHAPTER 2: LITERATURE REVIEW

The conceptual model of family financial socialization proposed by Gudmunson and Danes (2011) is the theoretical basis for the current study. From that model, variables from the family interaction, purposive financial socialization, financial capability, and financial behavior domains are included. The following review of the literature begins by focusing on the field of financial socialization generally, and then explores the literature focused specifically on the financial socialization processes within the family. Lastly, the need for the present study, given the current state of the family financial socialization theory literature, is discussed.

Financial Socialization

Financial socialization provides a more inclusive lens for understanding the various individual factors and relational processes leading to financial behavior. Financial socialization has its roots in consumer socialization which was defined by Ward (1974) as "processes by which young people acquire skills, knowledge, and attitudes relevant to their functioning as consumers in the marketplace" (p. 2). Though Ward intentionally limited his definition to the socialization that occurs during childhood, he noted it would be naïve to believe that consumer socialization did not continue into later stages of life. More recent definitions of consumer socialization have become more inclusive to development after childhood. For example, Roland-Lévy (2002) defined consumer socialization as "the whole process by which a child will develop an understanding of the economic world…. Furthermore, it refers to the adult's evolving outlook on the economy as his/her role in life changes in line with various economic events such as getting his/her first job, being unemployed or retiring" (p.17).

Researchers in the field of financial socialization expanded these definitions to include more psychological and relational elements, seeking to move beyond simply the skills and

knowledge necessary to be an informed consumer (Gudmunson & Danes, 2011; Xiao et al., 2011). Danes (1994) captured these qualities in her definition of financial socialization as "much more inclusive than learning to effectively function in the marketplace. It is the process of acquiring and developing values, attitudes, standards, norms, knowledge, and behaviors that contribute to the financial viability and well-being of the individual" (p. 128).

Family Financial Socialization Theory

The role of family in the financial socialization process has become an increasingly active area of research. There are countless ways of approaching the interplay between family dynamics and outcomes. The same is true for the role of the family in financial socialization, which has been a developing field for 40 years (Gudmunson & Danes, 2011).

A great deal of research regarding the link between demographic factors and financial outcomes has been conducted (e.g., Doss, Marlowe, & Godwin, 1995; Furnham, 1999, 2001). However, Moschis (1985), an early pioneer in the field, proposed that relational processes in the context of the family have a large impact on the development of children as consumers (see also Moschis, Moore, & Smith, 1984). These processes can be overtly financial, such as parental financial communication (Carlson & Grossbart, 1988; Carlson, Grossbart, Stuenkel, 1992), or more related to qualitative elements of family relationships such as warmth (Grusec, Goodnow, & Kuczynski, 2000) or security (Laible & Thompson, 2007).

Gudmunson and Danes (2011) proposed a conceptual model of family financial socialization that captured these various elements and the relationships between them (See Figure 1). The model consists of broad domains of family socialization processes and financial socialization outcomes. The current study examines variables in the family interaction and relationships, purposive financial socialization, financial capabilities, and financial behavior

domains. Literature related to the domains examined in the current study will be reviewed in following sections.

Family Interaction and Relationships

Gudmunson and Danes (2011) described this domain as essential because "[a] holistic view of financial socialization recognizes that interaction patterns among family members influence financial attitude development, knowledge transfer, and financial capability development even when financial socialization is implicit" (p. 649). Within the family financial socialization context, the parent-child relationship is one of the most important predictors of financial socialization outcomes (Flouri, 2004). In the current study, attachment is included as an indicator of parent-child bond. Bowlby (1973, 1980, 1982) described attachment as the bond that develops between an infant and a primary caregiver. This bond is of particular importance because it represents the first and most important interpersonal relationship. These early attachment experiences lay the foundation for the child's approach to, and expectations of, future interpersonal relationships.

Over time, the infant develops internal working models of self and others based on the nature of the bond with primary caregivers. If the caregiver is warm, responsive, and available the child is likely to develop a positive model of self as worthy and deserving of love; and others as reliable and comforting (Bowlby, 1982). Individuals who possess a positive model of self and others are said to be securely attached. However, if the caregiver is not consistently warm, responsive, and/or available, children are more likely to develop negative a negative model of self, others, or both (Bowlby, 1973).

These internal models persist into adolescence and adulthood where they govern the way in which individuals engage in interpersonal relationships (Bartholomew & Horowitz, 1991;

Hazan & Shaver, 1987). In adults, these "attachment styles" have been conceptualized and measured in several ways. Most conceptualize attachment as existing along two axes, anxiety and avoidance (Fraley, Waller, & Brennan, 2000). Adults exhibiting greater avoidance typically lack trust and fear intimacy with others (Bartholomew & Horowitz, 1991). Avoidant individuals also tend to value control and dominance. In contrast, adults with an anxious attachment pattern tend to desire greater union and fusion with others (Hazan & Shaver, 1987).

Since emotional support is often sought through interpersonal relationships, Sroufe and Waters (1977) proposed that attachment functions to regulate emotion through social interaction. Securely attached individuals, for example, are more likely to reach out to others when in distress which is an adaptive behavior. However those who are insecurely attached are less likely to reach out to others and, instead, pursue non-adaptive behaviors when distressed. Non-adaptive behaviors can include drinking (Mcnally, Palfai, Levine, & Moore, 2003), risky sexual behavior (Emerson, Donenberg, & Wilson, 2012), and gambling (Magoon & Ingersoll, 2006).

Within the realms of personal finance and financial socialization, no previous research has considered the role of attachment security. Given the fundamental importance of attachment in the development of both intrapersonal and relational orientations, it is surprising that it has not been applied previously in this domain of financial socialization which also has intrapersonal and relational components. The present study seeks to explore this gap in the literature and begin to understand the role of this fundamental psychological process in family financial socialization.

Purposive Financial Socialization

It is also important to examine the content of family socialization interactions regarding personal finance in addition to overall relationship quality. Within the realm of financial

socialization, the term purposive financial socialization was defined by Gudmunson and Danes (2011) as "intentional efforts family members use to financially socialize each other" (p. 649). Many researchers studying this construct consider both direct (e.g., discussion and teaching) and indirect (e.g., modeling) communication regarding financial topics (e.g., Carlson & Grossbart, 1988; Clarke, Heaton, Israelson, Eggett, 2005; Jorgensen & Savla, 2010; Mugenda, Hira, & Fanslow, 1990). Conceptualization of financial communication as consisting of both direct and indirect instruction yields a more holistic understanding of the socialization process. In the current study, emerging adult perceptions of parental direct and indirect financial communication was conceptualized broadly and was assessed accordingly.

It is important to note that in the Gudmunson and Danes (2011) model the relationship between purposive financial socialization is mediated by financial attitudes, knowledge, and capability variables. However, in the current study it is included with a direct relationship to financial behavior. This was not done to modify the Gudmunson and Danes model. Rather, the focus of the current study was to determine the role of attachment in the financial behavior of emerging adults.

Financial Capability

Financial capability is a broad domain encompassing intermediate outcomes that are also part of the process leading to financial behavior. Early research in the financial socialization field included variables such as attitudes, knowledge, and skills (Ward, 1974). More recently, researchers in the United Kingdom (Atkinson, McKay, Kempson, & Collard, 2006) and the United States (Johnson & Sherraden, 2007; Sherraden, 2010) began to use the term financial capability because it more completely captures the individual within family and societal systems.

Financial capability also captures individual motivational factors such as values, living standards, perceived needs, and self-efficacy (Gudmunson & Danes, 2011). In the current study, locus of control is included as a financial capability variable. Locus of control is a term given for the concept of internal versus external control of reinforcement that was developed out of social learning theory (Lefcourt, 1966, 1972; Rotter, 1966). Put more simply, locus of control captures the degree to which an individual perceives that reinforcement is contingent upon their own behavior versus factors beyond their control (i.e., luck, fate, powerful others). Individuals who perceive outcomes as the result of their own behavior are said to have an "internal" locus of control, while those who perceive outcomes as due to factors beyond their control are said to have an "external" locus of control (Busseri, Lefcourt, & Kerton, 1998).

Authors of reviews of the early literature examining locus of control reported some concerns with the way in which locus of control was being conceptualized within research (Joe, 1971; Lefcourt, 1966, 1972, 1982; Rotter, 1966). Chief among these concerns was the utilization of generalized locus of control measures to predict specific behaviors. Rotter (1975) addressed these concerns when reiterating his initial conceptualization of the construct as a generalized personality characteristic that would likely serve as a weak predictor of specific behaviors. In response, context-specific measures of locus of control have been developed for several domains including physical health (Wallston, Wallston, & DeVellis, 1978), mental health (Hill & Bale, 1980), and parenting (i.e., Campis, Lyman, & Prentis-Dunn, 1986; Furnham, 2010). In the current study, a measure inspired by the economic locus of control measure developed by Furnham (1986) is utilized. Additionally, a more general measure of internal versus external control of reinforcement is included with items drawn from measures created by Levenson (1973) and Reid and Ware (1974).

Financial Behavior

Financial behavior is a multi-faceted construct that can include any behavior within the diverse domains of the financial market. Gudmunson and Danes (2011) described two general types of financial behavior that appear in the literature. One type includes behaviors that represent a "pattern of actions over time such as earning, saving, spending, and gifting" (p. 650). The other type includes financial behavior processes that are event-like rather than immediate financial transactions. Such behaviors include opening or closing retirement or college savings accounts. The current study considers the former type of financial behavior in the domains of cash management, credit management, capital accumulation, and general management.

Emerging Adulthood

Individuals in their late teens and early twenties, particularly those who pursue higher education, represent a stage in development that presents unique challenges. In his seminal article, Arnett (2000) described "emerging adulthood" as a developmental stage that is distinct from both adolescence and young adulthood. Further, Arnett notes that emerging adulthood in industrialized societies is "a period characterized by change and exploration for most people, as they examine the life possibilities open to them and gradually arrive at more enduring choices in love, work, and worldviews" (p.479).

Further research by Arnett (2001) has established that emerging adulthood, despite its explorative and meandering nature, is still goal-directed toward the development of adult characteristics. Emerging adults report individualistic qualities as the most important benchmarks in the attainment of full adulthood. Specifically, qualities such as accepting

responsibility for one's actions, deciding on beliefs independent of parents, having an equal relationship with parents, and financial independence are ranked highest. These goals were also prominent in other studies in America and other Western industrialized nations (Arnett, 1994, 1997, 1998; Greene, Wheatley, & Aldava, 1992; Petrogiannis, 2011; Scheer, Unger, & Brown, 1996; Sirsch, Dreher, Mayr, & Willinger, 2009).

Financial independence is unique among these goals because it is not simply a cognitive distinction or differentiation from one's parents. Rather, independence from parental financial support represents a tangible separation from one's parents. One could also argue that emerging adults cannot fully achieve the goals of taking full responsibility for their actions and entering an equal relationship with parents if they remain dependent on parental financial support.

Effective financial independence, though, requires appropriate knowledge, capability, and practice. Various studies have found emerging adults to be lacking adequate financial knowledge (e.g., Jorgensen & Savla, 2010; Mandell, 2008). Additionally, many also remain dependent on their parent's financial support (e.g., Cohen, Kasen, Chen, Hartmark, & Gordon, 2003; PNC Bank, 2011), decreasing their ability to gain practical experience. Considered together, the lack of financial knowledge and experience among emerging adults is alarming and seriously decreases the likelihood of sound financial practice.

Though these troubling facts exist, we are only beginning to understand the complex socialization processes that lead to the current outcomes. These processes could prove to be critical areas in which efforts at behavior change can be targeted (Xiao et al., 2011). According to Gudmunson and Danes' (2011) review of 100 articles examining the various elements of family financial socialization, twenty-six percent examined the impact of family relationship

variables on financial attitudes, knowledge, or capabilities. Additionally, Gudmunson and Danes reported only four percent of the reviewed studies examined the impact of family relationships on purposive financial socialization. Given that purposive socialization of any kind is a relational process, it is surprising that so little research has been dedicated to illuminating the dynamics at play. To this end, the current study seeks to examine the impact of a fundamental parent-child relational construct, attachment, on purposive financial socialization. Additionally, the mediational role that purposive financial socialization and financial capability play in the relationship between attachment insecurity and financial behavior is examined. These processes could prove to be critical areas in which efforts at behavior change can be targeted (Xiao et al., 2011).

The emerging adult population was chosen for this study because they represent a unique transitional stage in development between near total dependence on family for many needs in adolescence and near total independence as they move into young adulthood. This is particularly true in the financial domain as emerging adults begin to accrue their own debt and engage in their own financial transactions (Hancock, Jorgensen, & Swanson, 2012). Emerging adulthood, then, may serve as a critical period where individuals are able to put all their previous financial socialization into practice. As we examine this behavior, it is important to reflect on the relational and intrapersonal processes and factors that contributed to those outcomes so that we can improve efforts to increase positive financial socialization within families.

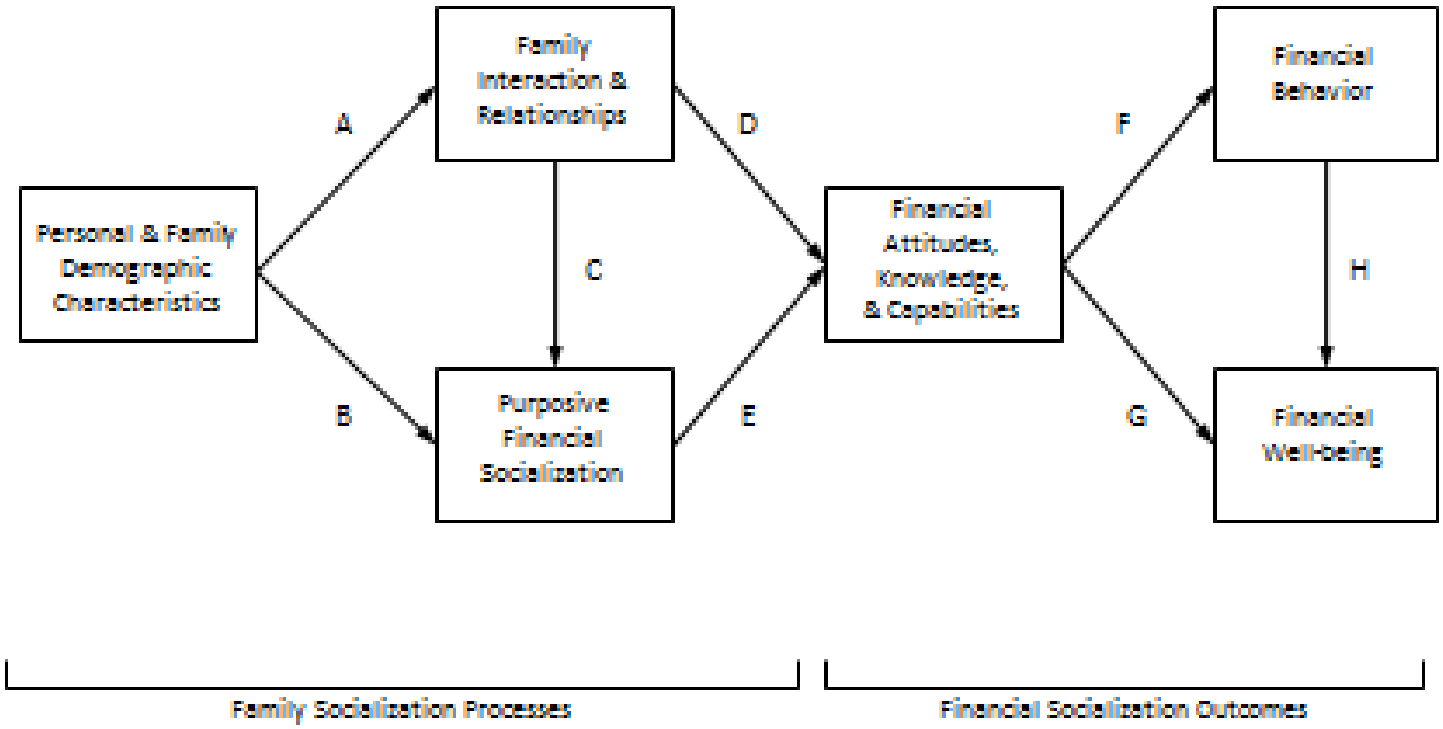

Figure 1. Conceptual Model of Family Financial Socialization. From "Family Financial Socialization: Theory and Critical Review" by C. G. Gudmunson and S. M. Danes, 2011, *Journal of Family and Economic Issues, 32,* p. 648. Reprinted with permission from Springer Science + Business Media and C.G. Gudmunson (See Appendices A-C).

REFERENCES

Arnett, J. J. (1994). Are college students adults? Their conceptions of the transition to adulthood. *Journal of Adult Development, 1,* 154-168. doi:10.1007/BF02277582

Arnett, J. J. (1997). Young people's conceptions of the transition to adulthood. *Youth & Society, 29,* 1-23. doi:10.1177/0044118X97029001001

Arnett, J. J. (1998). Learning to stand alone: The contemporary American transition to adulthood in cultural and historical context. *Human Development, 41,* 295-315. doi:10.1159/000022591

Arnett, J. J. (2000). Emerging adulthood: A theory of development from the late teens through the early twenties. *American Psychologist, 55*(5), 469-480. doi:10.1037/0003-066X.55.5.469

Arnett, J. J. (2001). Conceptions of the transition to adulthood: Perspectives from adolescence through midlife. *Journal of Adult Development, 8*(2), 133-143. doi:10.1023/A:1026450103225

Atkinson, A., McKay, S., Kempson, E., & Collard, S. (2006). *Levels of financial capability in the UK: Results of a baseline survey* (Consumer Research No. 47). Retrieved from Financial Services Authority website: http://www.fsa.gov.uk/pubs/consumer-research/crpr47.pdf

Bartholomew, K., & Horowitz, L. M. (1991). Attachment styles among young adults: A test of a four-category model. *Journal of Personality and Social Psychology, 61*(2), 226-244. doi:10.1037/0022-3514.61.2.226

Bowlby, J. (1973). *Separation*. New York: Basic Books.

Bowlby, J. (1980). *Attachment and loss: Vol. 3. Loss, sadness, and depression*. New York: Basic Books.

Bowlby, J. (1982). *Attachment and loss: Vol. 1. Attachment* (2nd ed.). New York: Basic Books (originally published in 1969).

Busseri, M. A., Lefcourt, H. M., & Kerton, R. R. (1998). Locus of control for consumer outcomes: Predicting consumer behavior. *Journal of Applied Social Psychology*, *28*(12), 1067-1087. doi:10.1111/j.1559-1816.1998.tb01668.x

Campis, L. K., Lyman, R. D., & Prentice-Dunn, S. (1986). The Parental Locus of Control Scale: Development and validation. *Journal of Clinical Child Psychology*, *15*(3), 260-267. doi:10.1207/s15374424jccp1503_10

Carlson, L., & Grossbart, S. (1988). Parental style and consumer socialization of children. *Journal of Consumer Research*, *15*(1), 77-94. doi:10.1086/209147

Carlson, L., Grossbart, S., & Stuenkel, J. (1992). The role of parental socialization types on differential family communication patterns regarding consumption. *Journal of Consumer Psychology*, *1*(1), 31-52. doi:10.1016/S1057-7408(08)80044-7

Clarke, M. C., Heaton, M. B., Israelsen, C. L., & Eggett, D. L. (2005). The Acquisition of Family Financial Roles and Responsibilities. *Family and Consumer Sciences Research Journal*, *33*(4), 321-340. doi:10.1177/1077727X04274117

Cohen, P., Kasen, S., Chen, H., Hartmark, C., & Gordon, K. (2003). Variations in patterns of developmental transitions in the emerging adulthood period. *Developmental Psychology*, *39*, 657-669. doi:10.1037/0012-1649.39.4.657

Danes, S. M. (1994). Parental perceptions of children's financial socialization. *Financial Counseling and Planning*, *5*, 127–149.

Doss, V. S., Marlowe, J., & Godwin, D. D. (1995). Middle-School Children's Sources of Uses of Money. *Journal of Consumer Affairs*, *29*(1), 219-241.

Emerson, E., Donenberg, G. R., & Wilson, H. W. (2012). Health-protective effects of attachment among African American girls in psychiatric care. *Journal of Family Psychology*, *26*(1), 124-132. doi:10.1037/a0026352

Flouri, E. (2004). Exploring the Relationship between Mothers' and Fathers' Parenting Practices and Children's Materialist Values. *Journal of Economic Psychology*, *25*(6), 743-752. doi:http://dx.doi.org/10.1016/j.joep.2003.06.005

Fraley, R., Waller, N. G., & Brennan, K. A. (2000). An item response theory analysis of self-report measures of adult attachment. *Journal of Personality and Social Psychology*, *78*(2), 350-365. doi:10.1037/0022-3514.78.2.350

Furnham, A. (1986). Economic locus of control. *Human Relations*, *39*, 29-43. doi:10.1177/001872678603900102

Furnham, A. (1999). The saving and spending habits of young people. *Journal of Economic Psychology*, *20*(6), 677-697. doi:10.1016/S0167-4870(99)00030-6

Furnham, A. (2001). Parental attitudes to pocket money/allowances for children. *Journal of Economic Psychology*, *22*(3), 397-422. doi:10.1016/S0167-4870(01)00040-X

Furnham, A. (2010). A parental locus of control scale. *Individual Differences Research*, *8*(3), 151-163.

Greene, A. L., Wheatley, S. M., & Aldava IV, J. F. (1992). Stages on life's way: Adolescents' implicit theories of the life course. *Journal of Adolescent Research*, *7*, 364-381. doi:10.1177/074355489273006

Grusec, J. E., Goodnow, J. J., & Kuczynski, L. (2000). New directions in analyses of parenting contributions to children's acquisition of values. *Child Development*, *71*(1), 205-211. doi:10.1111/1467-8624.00135

Gudmunson, C. G., & Danes, S. M. (2011). Family financial socialization: Theory and critical review. *Journal of Family and Economic Issues*, *32*(4), 644-667. doi:10.1007/s10834-011-9275-y

Hazan, C., & Shaver, P. (1987). Romantic love conceptualized as an attachment process. *Journal of Personality and Social Psychology*, *52*(3), 511-524. doi:10.1037/0022-3514.52.3.511

Hancock, A. M., Jorgensen, B. L., & Swanson, M. S. (2012). College students and credit card use: The role of parents, work experience, financial knowledge, and credit card attitudes. *Journal of Family and Economic Issues*. Advance online publication. doi:10.1007/s10834-012-9338-8

Hill, D. J., & Bale, R. M. (1980). Development of the Mental Health Locus of Control and Mental Health Locus of Origin scales. *Journal of Personality Assessment*, *44*(2), 148-156. doi:10.1207/s15327752jpa4402_5

Joe, V. C. (1971). Review of the internal-external control construct as a personality variable. *Psychological Reports*, *28*(2), 619-640.

Johnson, E., & Sherraden, M. S. (2007). From financial literacy to financial capability among youth. *Journal of Sociology & Social Welfare*, *34*(3), 119-146.

Jorgensen, B. L., & Savla, J. (2010). Financial literacy of young adults: The importance of parental socialization. *Family Relations*, *59*(4), 465-478. doi:10.1111/j.1741-3729.2010.00616.x

Laible, D., & Thompson, R. A. (2007). Early socialization: A relationship perspective. In J. E. Grusec & P. D. Hastings (Eds.), *Handbook of socialization: Theory and research* (pp.181-207). New York, London: Guilford Press.

Lefcourt, H. M. (1966). Internal versus external control of reinforcement: A review. *Psychological Bulletin*, *65*(4), 206-220. doi:10.1037/h0023116

Lefcourt, H. M. (1972). Recent developments in the study of locus of control. In B. A. Maher (Ed.), *Progress in experimental personality research* (Vol. 6, pp.1-39). New York: Academic Press.

Lefcourt, H. M. (1982). *Locus of control: Current trends in theory and research* (2nd ed.). Hillsdale, NJ: Lawrence Erlbaum.

Levenson, H. (1973). Multidimensional locus of control in psychiatric patients. *Journal of Consulting and Clinical Psychology*, *41*(3), 397-404. doi:10.1037/h0035357

Magoon, M. E., & Ingersoll, G. M. (2006). Parental Modeling, Attachment, and Supervision as Moderators of Adolescent Gambling. *Journal of Gambling Studies*, *22*(1), 1-22. doi:10.1007/s10899-005-9000-6

Mandell, L. (2008). The financial literacy of young American adults: Results of the 2008 national JumpStart coalition survey of high school seniors and college students. Retrieved from JumpStart Coalition for Personal Financial Literacy website: http://www.jumpstartcoalition.org/upload/2009BookcompleteafterLewEdits.pdf.

McNally, A. M., Palfai, T. P., Levine, R. V., & Moore, B. M. (2003). Attachment dimensions and drinking-related problems among young adults the meditational role of coping motives. *Addictive Behaviors*, *28*(6), 1115-1127. doi:10.1016/S0306-4603(02)00224-1

Moschis, G. P. (1985). The role of family communication in consumer socialization of children and adolescents. *Journal of Consumer Research*, *11*(4), 898-913. doi:10.1086/209025

Moschis, G. P., Moore, R. L., & Smith, R. B. (1984). The impact of family communication on adolescent consumer socialization. *Advances in Consumer Research*, *11*(1), 314-319.

Mugenda, O. M., Hira, T. K., & Fanslow, A. M. (1990). Assessing the causal relationship among communication, money management practices, satisfaction with financial status, and satisfaction with quality of life. *Lifestyles*, *11*(4), 343-360. doi:10.1007/BF00987345

Petrogiannis, K. (2011). Conceptions of the transition to adulthood in a sample of Greek higher education students. *International Journal of Psychology and Psychological Therapy*, *11*(1), 121-137.

PNC Bank. (2011). *PNC financial independence survey: A national study of the financial mindset of 20-somethings.* Retrieved from: https://www.pnc.com/

Reid, D., & Ware, E. E. (1974). Multidimensionality of internal versus external control: Addition of a third dimension and non-distinction of self versus others. *Canadian Journal of Behavioural Science*, *6*(2), 131-142. doi:10.1037/h0081862

Roland-Lévy, C. (2002). Economic socialization: How does one develop an understanding of the economic world? In M. Huchings, M. Fülöp & A. M. Van den dries (Eds), *Young people's understanding of economic issues in Europe, European issues in children's identity and citizenship* (pp. 17-30). Stoke-on-Trent, England: Trenham Books.

Rotter, J. B. (1966). Generalized expectancies for internal versus external control of reinforcement. *Psychological Monographs: General and Applied*, *80*(1), 1-28. doi:10.1037/h0092976

Rotter, J. B. (1975). Some problems and misconceptions related to the construct of internal versus external control of reinforcement. *Journal of Consulting and Clinical Psychology*, *43*(1), 56-67. doi:10.1037/h0076301

Scheer, S. D., Unger, D. G., & Brown, M. B. (1996). Adolescents becoming adults: Attributes for adulthood. *Adolescence*, *31*(121), 127-131.

Sherraden, M. S. (2010). *Financial capability: What is it, and how can it be created?* (CSD Working Paper No. 10-17). Retrieved from Center for Social Development website: http://csd.wustl.edu/Publications/Documents/WP10-17.pdf

Sirsch, U., Dreher, E., Mayr, E., & Willinger, U. (2009) What does it take to be an adult in Austria?: Views of adulthood in Austrian adolescents, emerging adults, and adults. *Journal of Adolescent Research*, *24*(3), 275-292. doi:10.1177/0743558408331184

Sroufe, L., & Waters, E. (1977). Attachment as an organizational construct. *Child Development*, *48*(4), 1184-1199. doi:10.2307/1128475

Wallston, K. A., Wallston, B. S., & DeVellis, R. (1978). Development of the Multidimensional Health Locus of Control (MHLC) scales. *Health Education & Behavior*, *6*(1), 160-170. doi:10.1177/109019817800600107

Ward, S. (1974). Consumer socialization. *Journal of Consumer Research*, *1*(2), 1-14. doi:10.1086/208584

Xiao, J. J., Ford, M., & Kim, J. (2011). Consumer financial behavior: An interdisciplinary review of selected theories and research. *Family and Consumer Sciences Research Journal*, *39*, 399–414. doi: 10.1111/j.1552-3934.2011.02078.x

CHAPTER 3: METHODOLOGY

The current study utilized data gathered as part of the Emerging Adult Financial Capability Study (EAFCS). The EAFCS was approved by the Institutional Review Board of East Carolina University (See Appendices A-C). A convenience sample was recruited from a large public university in the southeastern United States during the 2012 fall semester. Students who completed the survey received credit as part of courses covering topics related to family financial practice. Students who elected not to participate were given an alternative but equivalent assignment to complete. The EAFCS was administered using Qualtrics Research Suite, Version 32777 (©2012 Qualtrics Labs Inc.; Provo, UT). The survey was administered at an early point in the semester when few financial topics had been covered.

Sample

Since the current study focused on the emerging adult population, inclusion criteria were necessary to ensure we were indeed sampling the emerging adult population. Unfortunately, there is not an easily defined way of assessing a participants' emerging adult status because it is highly subjective and individualized. Due to the survey length concerns, it was not possible to collect enough demographic and developmental data to definitively arrive at a holistic assessment of the status of each participant. Therefore, age between 18 and 29 was employed as the inclusion criterion for the current study to minimize sampling outside of the emerging adult population. Individuals who were age 30 or older were excluded.

Due to significant missing data, 23 participants were eliminated from the analysis. The final sample consisted of 348 students (226 female). Unfortunately, a small number of participants in the final sample provided incomplete answers to the demographic questions. The number of missing responses is included with the demographic information displayed in Table 1.

The sample was comprised of approximately 63 freshmen (18%), 80 sophomores (23%), 111 juniors (32%), and 92 seniors (27%). Additionally, the majority of the sample identified as White or Caucasian (75%) with a smaller percentage of students identifying as African-American (17%), Hispanic (2%), or Asian American (2%).

Measures

All measures used for the current study were included as part of the Emerging Adult Financial Capability Study (EAFCS), a larger research project examining elements of financial capability of emerging adults. The measures from the EAFCS utilized in the current study will be outlined in the following sections.

Attachment Insecurity

The attachment insecurity latent variable was measured using the subscales of the Experiences in Close Relationships Scale- Revised (ECR-R; See Appendices A-C; Fraley, Waller, & Brennan, 2000) as indicator variables. The ECR-R subscales are comprised of 18 items related to attachment anxiety and 18 items related to attachment avoidance. The Cronbach's alpha score for the anxiety subscale (α= .94) and avoidance subscale (α=.88) were strong and comparable to previous studies. The measure allows for two-dimensional continuous assessment of both anxiety and avoidance (Brennan, Clark, & Shaver, 1998). The original ECR-R Scale used wording that focused on relationships with a significant other (e.g., spouse, girl/boyfriend), but the survey can be modified to focus on other relationships. For the purpose of this study, the scale was modified to assess relationships with other people generally. Each item was arranged with a seven-point Likert-type response ranging from one to seven, with one represented by "Strongly Disagree" and seven by "Strongly Agree". Higher scores indicate greater attachment insecurity.

Locus of Control

For the overall locus of control latent construct, two indicator scales were used: financial locus of control and general locus of control. The general locus of control scale (See Appendices A-C; α=.64) consisted of five questions that focused on participants' perception that they had control and influence over the events in their life (i.e., "When I make plans I am almost certain I can make them work"). Four questions were taken or adapted from Levenson's (1973) IPC Scale, and the remaining question was taken from the Reid-Ware Three Factor Internal-External Scale (Reid & Ware, 1974).

The financial locus of control scale (See Appendices A-C; α=.75) consisted of four items examining participants confidence and sense of control regarding their financial situation (i.e., "I feel in control of my financial situation"). The items on both scales were four-point Likert-type responses ranging from one to four with one represented by "Strongly Disagree" and four by "Strongly Agree". Higher scores indicated greater internal locus of control.

Financial Communication

The latent construct of financial communication was measured using two indicator scales, direct and indirect financial communication (See Appendices A-C). Both the direct (α=.94) and indirect (α=.96) scales were reliable. The scales consisted of the same fifteen financial topic items (i.e., budgeting, building good credit, medical insurance). The items were four-point Likert-type responses ranging from one to four with one represented by "Never" and four by "Always", thus higher scores indicate more frequent parental communication. Participants answered according to their perception of parental direct or indirect communication about those financial topics.

Financial Behavior

Lastly, the latent construct of financial behavior was measured using four indicator scales modeled (See Appendices A-C) after the domains of financial behavior outlined by Porter and Garman (1993). The subscales used in the current study were cash management, credit management, capital accumulation, general management. The cash management scale contained three items with four-point Likert-type responses examining behavior related to managing one's cash reserves (e.g., "I used a weekly/monthly budget to track my income and expenses"). Similarly, the credit management scale contained a total of four questions, though only two were four-point Likert-type responses. The other two items related to pay-day loan usage and credit card possession were five- and seven-point Likert-type items, respectively. The capital accumulation scale was comprised of two five-point Likert-type items ranging from one to five, with one represented by "Never" and five by "Always". These items examined saving and investment behavior. Lastly, the general management scale was comprised of three four-point Likert-type questions related to long-term planning and continuous assessment of overall financial status. Responses ranged from one to four with one represented as "Never" and four represented as "Always". Two other domains proposed by Porter and Garman related to insurance and retirement planning were eliminated from the current analysis because they were found to have limited relevance or variance in the higher education emerging adult population (i.e., legal/school requirements to carry certain types of insurance).

Hypotheses

The central focus of the current study is the nature of the relationship between attachment insecurity and financial behavior. Consistent with the model proposed by Gudmunson and Danes (2011) the relationship is hypothesized to be fully mediated by locus of control and

parental financial communication. Additionally, since previous research has linked attachment insecurity to negative behavior, a negative indirect relationship with positive financial behavior is expected.

Consistent with the argument put forth by Lefcourt (1982), attachment insecurity is expected to have a negative relationship with the locus of control latent construct where higher scores indicate greater internality. Similarly, since attachment is a relational construct that is an important indicator of the parent-child relationship, it is hypothesized that a negative relationship will exist between attachment insecurity and parental financial communication.

The mediating constructs of locus of control and parental financial communication are expected to have positive relationships with the financial behavior construct. Locus of control is expected to have a positive relationship because of its implications for perceived competence and confidence within the financial marketplace. Financial communication by parents is expected to increase positive financial behavior because it is an indicator of purposive financial socialization.

In summary, the research hypotheses are:

H1: The relationship between attachment insecurity and financial behavior will be mediated by the locus of control and parental financial communication constructs.

H2: The indirect effect of attachment insecurity on financial behavior will be negative.

H3: Attachment insecurity will have a negative relationship with the locus of control construct.

H4: Attachment insecurity will have a negative relationship with the parental financial communication construct.

H5: Locus of control will have a positive relationship with the financial behavior construct

H6: Parental financial communication will have a positive relationship with the financial behavior construct.

Analysis

Hoyle (1995) described Structural Equation Modeling (SEM) as "a comprehensive statistical approach to testing hypotheses about relations among observed and latent variables" (p.1). Further, several authors have argued that hypothesized moderating and mediating relationships can be appropriately evaluated using SEM (Baron & Kenny 1986; Hopwood, 2007). Additionally, SEM allows for the identification and quantification of both direct and indirect effects between variables. Since the current study examined complex direct and indirect relationships between both latent and observed variables, including mediating effects, SEM was chosen as an appropriate mode of analysis. The path diagram used in the current study was created in the SPSS AMOS program (Version 20.0.0).

Prior to full analysis of the current model, bivariate Spearman correlations were conducted within the manifest indicators of the attachment insecurity and financial behavior latent constructs, as these were expected to have some correlation. These relationships were also examined upon analysis using structural equation modeling. Any covariances that were non-significant when considered in the context of the full model were removed because the covariance was likely accounted for elsewhere in the model.

The path diagram displayed in Figure 1 includes a direct relationship from the attachment insecurity latent variable to the financial behavior latent variable, which was hypothesized to be mediated by the financial communication and locus of control latent variables. Mediation is indicated if, upon analysis, the regression weight for that path is small and non-significant.

Table 1

Participant Demographic Information

Variable	*N*	Percentage
Total	348	
Age		
18-22	321	92%
23-25	21	6%
26-29	6	2%
Academic Standing		
Freshman	63	18%
Sophomore	80	23%
Junior	111	32%
Senior	92	26%
Missing	2	1%
Gender		
Male	118	34%
Female	226	65%
Missing	4	1%
Ethnicity		
White or Caucasian	260	75%
African American	60	17%
Hispanic American	8	2%
Asian American	8	2%
American Indian, Native Alaskan or Hawaiian	1	.3%
Other	10	3%
Missing	1	.3%

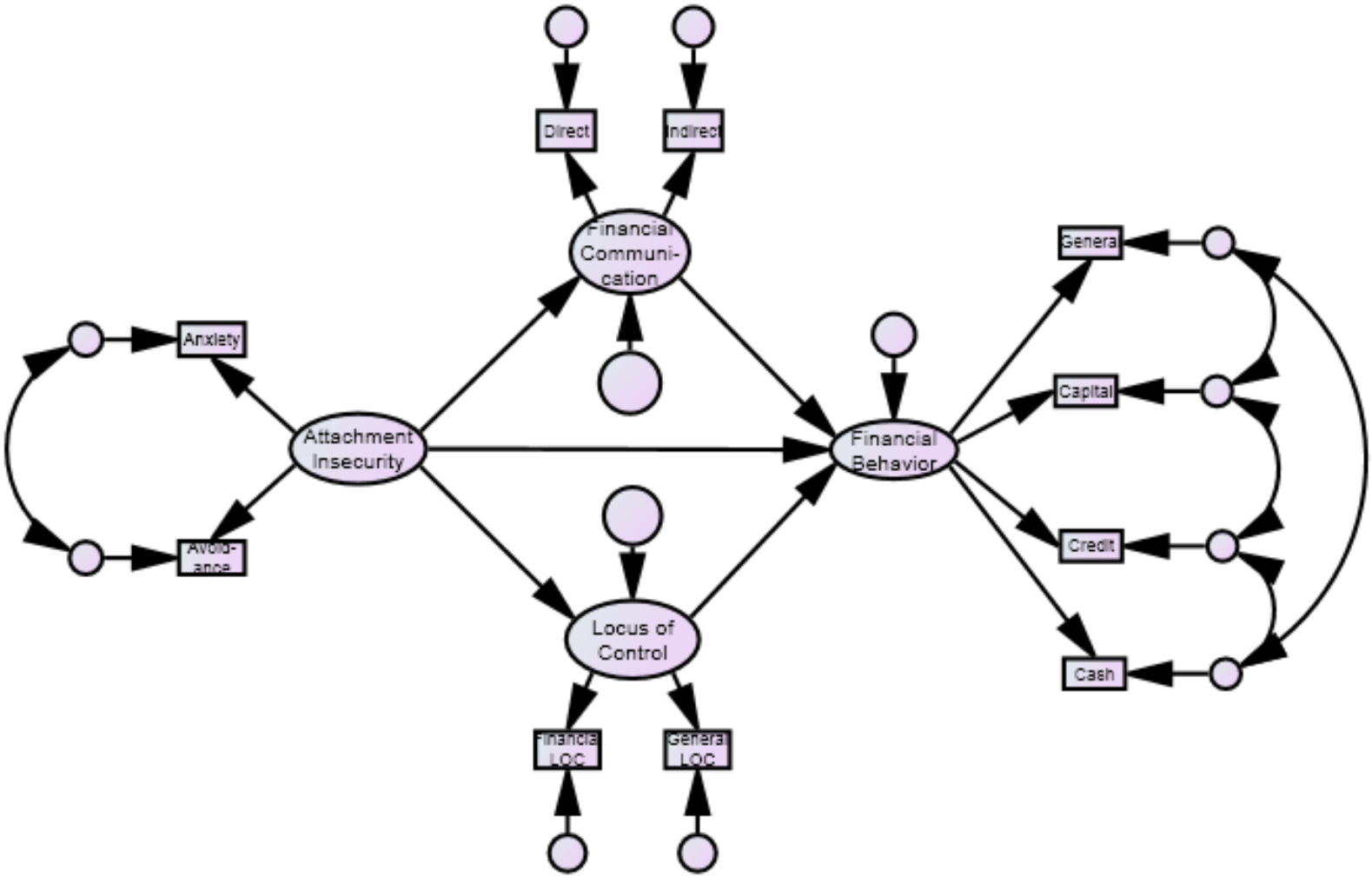

Figure 1. Path Diagram with Unmediated Direct Relationship. Latent constructs are represented by ovals and observed variables are represented as rectangles.

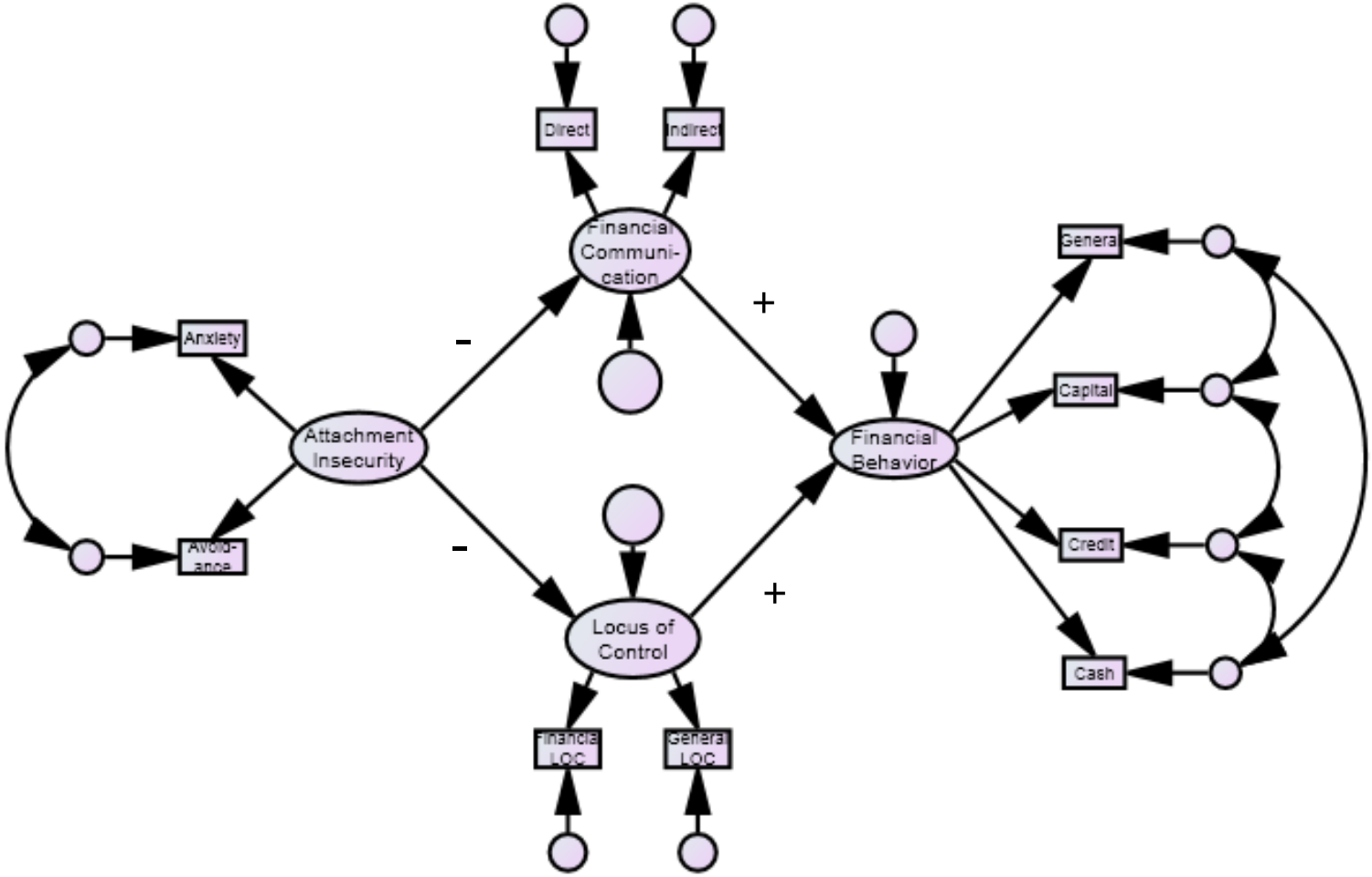

Figure 2. Final Path Diagram with Mediated Relationship. Latent constructs are represented by ovals and observed variables are represented as rectangles. Includes hypothesized direction of the relationships between the latent constructs.

REFERENCES

Baron, R. M., & Kenny, D. A. (1986). The moderator–mediator variable distinction in social psychological research: Conceptual, strategic, and statistical considerations. *Journal of Personality and Social Psychology*, *51*(6), 1173-1182. doi:10.1037/0022-3514.51.6.1173

Brennan, K. A., Clark, C. L., &Shaver, P. R. (1998). Self-report measurement of adult attachment: An integrative overview. In J. A. Simpson (Ed.), *Attachment theory and close relationships* (pp. 46-76). New York, NY: Guilford Press.

Fraley, R., Waller, N. G., & Brennan, K. A. (2000). An item response theory analysis of self-report measures of adult attachment. *Journal of Personality and Social Psychology*, *78*(2), 350-365. doi:10.1037/0022-3514.78.2.350

Gudmunson, C. G., & Danes, S. M. (2011). Family financial socialization: Theory and critical review. *Journal of Family and Economic Issues*, *32*(4), 644-667. doi:10.1007/s10834-011-9275-y

Hopwood, C. J. (2007). Moderation and mediation in structural equation modeling: Applications for early intervention research. *Journal of Early Intervention*, *29*(3), 262-272. doi:10.1177/105381510702900305

Hoyle, R. H. (1995). The structural equation modeling approach: Basic concepts and fundamental issues. In R. H. Hoyle (Ed.), *Structural equation modeling: Concepts, issues, and applications.* (pp. 1-15). Thousand Oaks, CA: SAGE Publications.

Lefcourt, H. M. (1982). *Locus of control: Current trends in theory and research* (2nd ed.). Hillsdale, NJ: Lawrence Erlbaum.

Levenson, H. (1973). Multidimensional locus of control in psychiatric patients. *Journal of Consulting and Clinical Psychology*, *41*(3), 397-404. doi:10.1037/h0035357

Porter, N. M., & Garman, E. T. (1993). Testing a conceptual model of financial well-being. *Financial Counseling and Planning, 4*, 135-164.

Qualtrics Research Suite (Version 32,777) [Computer software]. Provo, Utah: Qualtrics.

Reid, D., & Ware, E. E. (1974). Multidimensionality of internal versus external control: Addition of a third dimension and non-distinction of self versus others. *Canadian Journal of Behavioural Science, 6*(2), 131-142. doi:10.1037/h0081862

SPSS Amos (Version 20.0.0) [Computer software]. Armonk, New York: IBM.

CHAPTER 4: RESULTS

Differences Between Demographic Groups

Several analyses were conducted to examine potential differences on some of the variables measured in the model across demographic categories. The results of these analyses are reported in the following sections.

Age Group

Across the age categories in the current study there were only two significant differences found across the indicators of attachment insecurity, locus of control, parental financial communication and financial behavior. Specifically, a one-way analysis of variance found significant differences across the three age categories, $F(2, 345)= 4.19$, $p< .05$. Post hoc analyses using the Tukey HSD test found that 18 to 22 year old participants ($M= 42.68$, SD= 10.21) reported significantly more direct parental financial communication than did 23 to 25 year old participants ($M=36.00$, SD=11.33) at the $p< .05$ level. Significant differences between age category were also found for financial locus of control, $F(2, 345)= 3.05$, $p< .05$. Participants aged 23 to 25 ($M= 11.10$, SD= 2.02) reported significantly less internal financial locus of control than did their 26 to 29 year old peers ($M= 13.33$, SD= 1.75).

Academic Standing

Using one-way analyses of variance, significant differences across academic standing categories were found for attachment avoidance, $F(3, 342)= 2.87$, $p< .05$. Post hoc testing identified sophomores ($M=3.64$, SD=.79) as having significantly greater attachment avoidance than juniors ($M=3.30$, SD=.83) at the $p<.05$ level. A significant difference across academic standing categories in capital accumulation practices was found, $F(3, 342)= 3.74$, $p< .05$. Specifically, post hoc tests identified seniors ($M=4.60$, SD=1.45) as engaging in significantly

less capital accumulation behavior than both freshman (*M*=4.92, SD=1.32) and sophomores (*M*=4.80, SD=1.63) at the $p < .05$ level. Similar differences were found across class standing for direct parental financial communication, $F(3, 342) = 4.22$, $p < .01$. Seniors (*M*=39.36, SD=11.19) were identified by post hoc testing to receive significantly more direct communication from parents than did freshman (*M*=44.48, SD=9.93) or juniors (*M*=43.69, SD=9.41) at the $p < .05$ level. Lastly, significant differences existed for indirect parental financial communication, $F(3, 342) = 3.74$, $p < .05$. Post hoc tests identified sophomores (*M*=40.98, SD=12.33) and seniors (*M*=39.49, SD=12.36) as receiving significantly less indirect financial communication from parents than freshman (*M*=45.51, SD=9.24) at the $p < .05$ level.

Ethnicity

Due to the small sample of Asian American, American Indian, Alaska Native, Native Hawaiian, and "mixed or other" participants, significant differences across the variables in the model could not be analyzed. However, independent-sample *t*-tests were conducted to identify significant differences between African-American and Caucasian participants. Only one significant difference was found. Caucasian participants (*M*=3.75, SD=1.13) reported significantly more attachment anxiety than did African-American participants (*M*=3.30, SD=1.18), $t(318) = 2.70$, $p < .01$.

Gender

Males (*M*=3.94, SD=1.08) reported significantly greater attachment anxiety than did females (*M*=3.56, SD=1.18) in the current sample, $t(342) = 2.92$, $p < .01$. Additionally, males also reported significantly greater attachment avoidance (*M*=3.57, SD=.71) than females (*M*=3.29, SD=.90), $t(342) = 2.92$, $p < .01$. No significant differences were found for the parental financial communication variables. Females reported significantly more cash management behavior

(*M*=9.25, SD=1.81) than did males (*M*=8.72, SD=1.63), *t*(342)= 2.65, *p*< .01. Conversely, males (*M*=4.87, SD=1.45) reported greater capital accumulation behavior than females (*M*=4.46, SD=1.43), *t*(342)= 2.04, *p*< .05. Lastly, males reported a significantly more internal locus of control (*M*=11.75, SD=1.75) than did women (*M*=11.28, SD=2.11), *t*(342)= 2.65, *p*< .01.

Descriptive Statistics

The sample in the present study reported slightly greater attachment anxiety (*M*=3.68, SD=1.16) than attachment avoidance (*M*=3.39, SD= .84). In terms of locus of control, the mean for the general locus of control measure (*M*=15.09, SD=1.95) indicated the sample had a more internal locus of control, though it is not extreme. In terms of financial locus of control (*M*=11.42, SD= 1.98), the sample was very close to the midpoint indicating a nearly equal split between externality and internality. The direct and indirect communication scales were quite similar, though the indirect scale was slightly more variable. Lastly, the current sample reported high positive cash management and credit management behavior, while the capital accumulation and general management behavior were closer to the middle score for the scales. All descriptive statistics can be found in Table 1.

Bivariate Correlations

In studies that utilize the Experiences in Close Relationships-Revised scale(ECR-R; Fraley, Waller, & Brennan, 2000), it is common for there to be a moderate-to-high covariance between the anxiety and avoidance subscales (e.g., Fraley, Vicary, Brumbaugh, & Roisman, 2011). In the current study, the correlation between these measures was significant (*r*=.39, *p*<.001) and consistent with prior research utilizing the ECR-R. Given this significant relationship, a correlation was included in the structural model.

It was anticipated that there would likely be significant covariance between the manifest indicator variables of financial behavior. Spearman correlations were employed to examine these relationships (See Table 2). The correlation between credit management and general management was the only relationship that was not significant and, therefore, was not included in the initial structural model. The remaining five correlations were included in the initial model. However, the initial analysis of the model revealed a non-significant correlation between cash management and capital accumulation (estimate=.07, p=.51). Since the relationship was small and no longer significant when considered in the context of the entire model, the covariance between the variables was likely accounted for elsewhere in the model. For this reason, this correlation was removed from the model.

Spearman correlations were also calculated for the manifest indicators of the locus of control and financial communication latent constructs. There was a strong significant correlation between the direct and indirect financial communication variables (ρ= .75, p< .001). Likewise, a significant correlation was found between the financial and general locus of control scales (ρ= .32, p< .001). However, these correlations were no longer significant when the entire model was analyzed and they were removed from the model.

Initial Model Testing

Structural Equation Modeling (SEM) was utilized to evaluate direct and indirect effects, mediation, and overall model fit. The data were entered into SPSS and cleaned according to accepted standards. The data were then linked to AMOS software (Version 20.0.0) for model testing. For the non-demographic variables in the current study there were no missing data, therefore no data imputation was necessary. All analysis by the AMOS program in the current study was conducted using maximum likelihood estimation (MLE). In a preliminary analysis of

the initial model, the direct relationship between attachment insecurity and financial behavior was found to be small and non-significant (β= -.011, p= .994), indicating mediation and confirming hypothesis one of the current study. The direct relationship was removed from the model for the final analysis.

During the first analysis of the structural model, two so-called "Heywood cases" were found in which the error variances were negative for the direct financial communication indicator variable and financial behavior latent variable. Heywood cases present a challenge to the validity of the results gained from structural covariance analysis. The handling of such results has been a matter of debate among scholars (e.g., Chen, Bollen, Paxton, Curran, & Kirby, 2001; Dillon, Kumar, & Mulani, 1987; Rindskopf, 1983). Of chief concern is the cause of the negative error variance values. They can result from one of two different issues: misspecification of the model itself or fluctuations within the sample data. According to Chen et al. (2001), negative error variances are most likely due to fluctuations in the sample data when the offending variance estimate is not significantly different than zero. This was the case in the current study where both of the error variances found to be negative were not significantly different from zero.

In analyses in which the negative value can be attributed to sample fluctuations, several solutions have been proposed. One approach is to constrain the value of the error variance in question to a small positive number. This strategy has been shown to have little impact on general fit statistics and is equally as effective as more complex techniques (Dillon et al., 1987), such as the one proposed by Rindskopf (1983). Additionally, results reported by Chen et al. (2001) suggest that fixing a previously negative error variance has little impact on fit statistics. For these reasons, this strategy was utilized in the current study. Consistent with findings by

Dillon et al. (1987) and Chen et al. (2001), the original fit statistic values in the current study (CFI=.975, TLI=.957, RMSEA=.048, Standardized RMR=.0465) were not largely different than the values generated after fixing the negative variances to a small positive number (CFI=.971, TLI=.953, RMSEA=.050, Standardized RMR=.049).

Findings

The necessary constraints were placed on the error variance terms of the direct communication and financial behavior variables. The model was then analyzed using the same procedure with the SPSS Amos program (Version 20.0.0). The standardized regression weights for the paths from attachment insecurity to locus of control (β= -.956, p<.01) and to financial communication (β= -.380, p<.001) were found to be significant and negative, confirming hypotheses three and four. These relationships are consistent with our hypothesized direction and indicate that a one standard deviation increase in attachment insecurity predicted a .956 standard deviation decrease in internal locus of control and a .380 standard deviation decrease in financial communication. Additionally, the paths to financial behavior from general locus of control (β= .615, p<.001) and financial communication (β= .338, p<.001) were found to be significant (See Table 3 and Figure 1), confirming hypotheses five and six. In other words greater internal locus of control and parental financial communication was associated with greater positive financial behavior. The squared multiple correlation (R^2) for the financial behavior latent construct was .644, meaning 64% of the variance in the financial behavior latent construct was accounted for by attachment insecurity, parental financial communication and locus of control.

Standardized factor loadings for each latent variable were calculated (see Table 4). Most loadings exceeded or approached .40 for their loading value. However, the credit management

(.20) and attachment anxiety (.23) were less than .30, indicating they were less important in determining their respective unobserved factors as were other indicators.

Lastly, all correlation values were found to be significant (see Table 5). As expected, there was a significant moderate-to-high positive correlation between attachment anxiety and attachment avoidance (estimate= .34, $p < .001$). There was also a strong significant correlation between capital accumulation and general financial management (estimate= .45, $p < .001$). Such a correlation is not shocking because attaining future financial goals and plans requires saving behavior.

Fit statistics were employed to examine the overall fit of the model to the sample data. A statistically significant chi-square value was produced, χ^2 (28, N=348) = 52.02, $p < .01$. However, this result may be due to the relatively large sample in the current study or deviations from normality within the data. According to generally held standards for fit statistics, a value for the comparative fit index (CFI) and Tucker-Lewis Index (TLI) greater than .950, root mean square error of approximation (RMSEA) of .060 or less, and standardized root mean square residual (SRMR) values less than .080 indicate good fit (Hu & Bentler, 1999; MacCallum, Browne, & Sugawara, 1996; Schreiber, Stage, King, Nora, & Barlow, 2006; Yu, 2002). The fit statistics computed for the current model (CFI=.971, TLI=.953, RMSEA=.050, SRMR=.049) met or exceeded these generally held standards, indicating good fit.

Indirect Effects

Structural equation modeling allows for the computation of standardized indirect effects. These values indicate the observed magnitude of change, in terms of standard deviations, in one latent or indicator variable in response to a one standard deviation increase in a preceding latent variable to which there is a non-direct pathway in the model. All indirect effects for the current

model are listed in Table 6. Significance of the indirect effects was calculated using a 500-subsample maximum likelihood bootstrap with bias-corrected 95% confidence intervals. All indirect effects in the updated model were significant at least at the $p < .01$ level except for indirect effects on the credit management behavior from attachment insecurity and financial communication which were significant at the $p < .05$ level.

In relation to the central question of the current study, the indirect effect of attachment insecurity on the financial behavior latent construct was strong and negative ($\beta = -.717$, $p \leq .001$), confirming hypothesis two. In other words, security in one's close relationships, through more proximal interpersonal and intrapersonal variables, exerts a large effect on positive financial behavior. Of the indicators of financial behavior, the cash management ($\beta = -.385$, $p < .01$) and general management ($\beta = -.402$, $p < .01$) indicators of financial behavior had the strongest indirect effects from attachment insecurity.

Locus of control exerted larger standardized indirect effects on the financial behavior indicators compared to financial communication. The greatest effects of locus of control were observed for the cash management ($\beta = .336$, $p < .01$) and general management indicators ($\beta = .345$, $p < .01$), indicating that a greater internal locus of control is associated with greater cash and general management practices. Similarly the financial communication latent construct had its greatest indirect effects on the cash ($\beta = .182$, $p < .01$) and general management ($\beta = .190$, $p < .01$) indicators.

In considering the indirect effects on the financial behavior indicators together, an interesting trend is present. For the indirect effects of attachment insecurity, financial communication, and locus of control, the largest effects are exerted on cash and general management. Conversely, these constructs have the least impact on credit management. There is

an intermediate level of effect on capital accumulation, relative to the other behaviors. Put more simply, the constructs considered in the current study appear to exert greater influence on goal setting as well as saving behavior, but have much a much smaller impact within the realm of credit. Other mediating constructs not considered in the current study may better account for changes in credit management.

Indirect effects of attachment insecurity on the indicators of the mediating constructs were also calculated. Those calculated for the financial (β= -.618, p< .01) and general (β= -.583, p<.01) locus of control indicators were particularly strong, indicating that uncertainty in one's relationships can impact the degree to which one perceives control over outcomes in general and within personal finance specifically. Additionally, the indirect effect was greater for direct financial communication (β= -.378, p< .01) compared to indirect communication about finances (β= -.295, p< .01).

Table 1

Descriptive Statistics for the Manifest Indicators

Variable	*M*	SD	Minimum	Maximum	Median
Attachment Insecurity					
Anxiety	3.68	1.16	1.00	6.29	4.00
Avoidance	3.39	0.84	1.11	5.00	3.61
Locus of Control					
General	15.11	1.96	8.00	20.00	15.00
Financial	11.43	2.00	4.00	16.00	12.00
Financial Communication					
Direct	42.25	10.40	15.00	60.00	44.00
Indirect	41.80	11.53	15.00	60.00	44.00
Financial Behavior					
Cash Management	9.05	1.77	4.00	12.00	9.00
Credit Management	17.23	2.05	8.00	20.00	17.00
Capital Accumulation	4.59	1.46	2.00	8.00	4.50
General Management	8.11	2.07	3.00	12.00	8.00

Table 2

Spearman Correlations of Financial Behavior Indicator Scales

	1	2	3	4
1 Cash Management				
2 Credit Management	.27***			
3 Capital Accumulation	.13**	-.11*		
4 General Management	.36***	.06	.53***	

*p<.05, ** p<.01, *** p≤.001

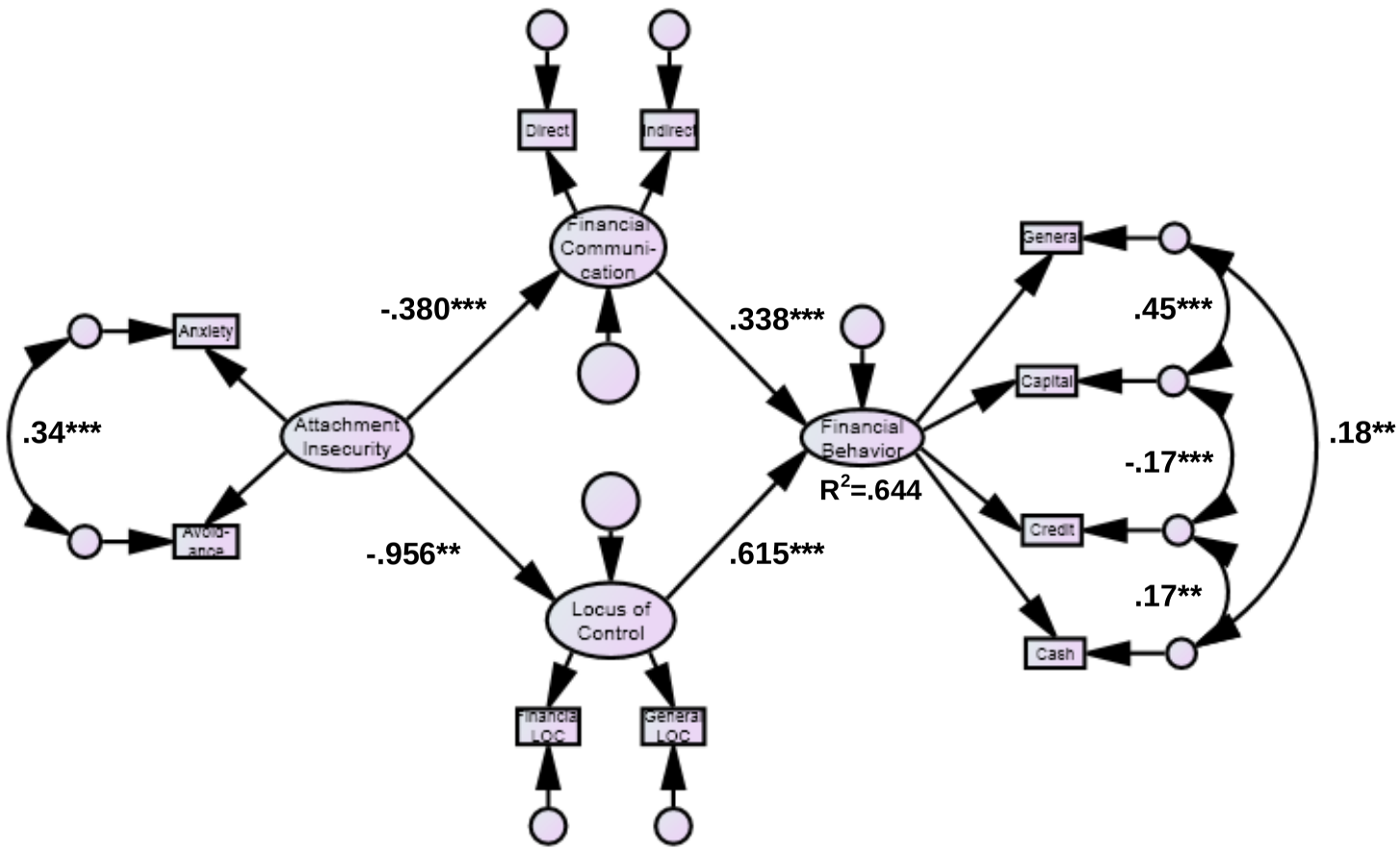

Figure 1. Results of Structural Equation Modeling Analysis. Standardized regression weights and correlation values obtained from analysis with structural equation modeling. Ovals represent latent constructs, while rectangles represent observed variables. For this model, CFI=.971, TLI=.953, RMSEA=.050, SRMR=.049. *p<.05, ** p<.01, *** p≤.001

Table 3

Regression Weights in the Updated Model

			Estimates				
			β	*B*	S.E.	C.R.	*p*
Attachment Insecurity	→	Locus of Control	-.956	-3.296	1.153	-2.86	.004
Attachment Insecurity	→	Financial Communication	-.380	-11.348	2.759	-4.11	.000
Locus of Control	→	Financial Behavior	.615	.611	.130	4.70	.000
Financial Communication	→	Financial Behavior	.338	.039	.010	3.91	.000

Note. S.E.= standard error; C.R.= critical ratio.

Table 4

Standardized Factor Loadings for the Updated Model

Indicator	Loading
Attachment Insecurity	
Avoidance	.41 [1]
Anxiety	.23
Locus of Control	
Financial LOC	.65
General LOC	.61 [1]
Financial Communication	
Direct	.99[1]
Indirect	.78
Financial Behavior	
General Management	.56[1]
Cash Management	.54
Capital Accumulation	.43
Credit Management	.20

[1] = Manifest indicator fixed to 1

Table 5

Correlation Values in the Updated Model

Variables			Estimate
Financial Behavior			
Cash Management	↔	Credit Management	.17**
Cash Management	↔	General Management	.18**
Capital Accumulation	↔	Credit Management	-.17***
Capital Accumulation	↔	General Management	.45***
Attachment Insecurity			
Anxiety	↔	Avoidance	.34***

**p<.01, ***p<.001

Table 6

Standardized and Unstandardized Indirect Effects in the Updated Model

	Explanatory Variables					
	Attachment Insecurity		Locus of Control		Financial Communication	
	β	B	*β*	B	*β*	B
Locus of Control						
Financial	-.618**	-3.57				
General	-.583**	-3.30				
Financial Communication						
Direct	-.378**	-11.35				
Indirect	-.295**	-9.81				
Financial Behavior	-.717***	-2.46				
General Management	-.402**	-2.46	.345**	.611	.190**	.039
Cash Management	-.385**	-1.98	.331**	.494	.182**	.031
Capital Accumulation	-.305**	-1.28	.261**	.320	.144**	.020
Credit Management	-.145*	-0.85	.124**	.213	.068*	.013

Note. *β* = standardized, B= unstandardized. Significance calculated using maximum likelihood bootstrap with 500 subsamples and bias-corrected 95% confidence intervals. *$p < .05$, **$p \leq .01$, ***$p \leq .001$

REFERENCES

Chen, F., Bollen, K. A., Paxton, P., Curran, P. J., & Kirby, J. B. (2001). Improper solutions in structural equation models: Causes, consequences, and strategies. *Sociological Methods & Research*, *29*(4), 468-508. doi:10.1177/0049124101029004003

Dillon, W. R., Kumar, A., & Mulani, N. (1987). Offending estimates in covariance structure analysis: Comments on the causes of and solutions to Heywood cases. *Psychological Bulletin*, *101*(1), 126-135. doi:10.1037/0033-2909.101.1.126

Fraley, R., Vicary, A. M., Brumbaugh, C., & Roisman, G. I. (2011). Patterns of stability in adult attachment: An empirical test of two models of continuity and change. *Journal of Personality and Social Psychology*, *101*(5), 974-992. doi:10.1037/a0024150

Fraley, R., Waller, N. G., & Brennan, K. A. (2000). An item response theory analysis of self-report measures of adult attachment. *Journal of Personality and Social Psychology*, *78*(2), 350-365. doi:10.1037/0022-3514.78.2.350

Hu, L., & Bentler, P. M. (1999). Cutoff criteria for fit indexes in covariance structure analysis: Conventional criteria versus new alternatives. *Structural Equation Modeling*, *6*(1), 1-55. doi:10.1080/10705519909540118

MacCallum, R. C., Browne, M. W., & Sugawara, H. M. (1996). Power analysis and determination of sample size for covariance structure modeling. *Psychological Methods*, *1*(2), 130-149. doi:10.1037/1082-989X.1.2.130

Rindskopf, D. (1983). Parameterizing inequality constraints on unique variances in linear structural models. *Psychometrika*, *48*(1), 73-83. doi:10.1007/BF02314677

Schreiber, J. B., Stage, F. K., King, J., Nora, A., & Barlow, E. A. (2006). Reporting Structural Equation Modeling and Confirmatory Factor Analysis Results: A Review. *The Journal of Educational Research*, *99*(6), 323-337. doi:10.3200/JOER.99.6.323-338

SPSS Amos (Version 20.0.0) [Computer software]. Armonk, New York: IBM.

Yu, C. Y. (2002). Evaluation of model fit indices for latent variable models with categorical and continuous outcomes. Unpublished dissertation. Retrieved February 5, 2013, from Mplus website http://www.statmodel.com/download/Yudissertation.pdf

CHAPTER 5: DISCUSSION

Role of Attachment in Financial Socialization and Behavior

The current study utilized structural equation modeling to confirm part of the model of family financial socialization theory proposed by Gudmunson and Danes (2011). More specifically, the current study examined the relationships between family relationship quality, purposive financial socialization, financial capability, and financial behavior. The strong relationships between these variables as well as the strong overall fit of the current model lend support to the Gudmunson and Danes family financial socialization conceptual model.

Additional support is found in the nature of the relationship between attachment insecurity and financial behavior. As hypothesized, the relationship was found to be fully mediated by locus of control and parental financial communication. Since attachment is a relational construct with particular importance for the parent-child relationship (Bowlby, 1973, 1980, 1982), it is not surprising that it would impact the level of financial communication between parent and child. Yet, attachment is also an intrapersonal construct with impacts on beliefs of competence (Shaver & Mikulincer, 2007), which are important to the development of an internal locus of control (Lefcourt, 1982). Moreover, researchers have demonstrated that attachment is linked to non-relationship behavior through more proximal mediating constructs (e.g., Emerson, Donenberg, & Wilson, 2012; Mcnally, Palfai, Levine, & Moore, 2003). The current findings are consistent with these prior studies in that they found the relationship to be mediated by constructs that are more proximal to the outcome behavior. The identification of attachment insecurity as an important family relationship variable with a significant impact on purposive financial socialization adds to the small amount of literature that examines this relationship. Overall, the finding of a mediated relationship between attachment insecurity and

financial behavior supports the structure of the Gudmunson and Danes (2011) model. Moreover, they establish attachment security as an important family relationship factor in the family financial socialization process.

The very strong negative direct effect from attachment insecurity to internal locus of control is also important. This result was hypothesized and is consistent with Sroufe's (1979) findings that attachment security in childhood is associated with confidence and skill development. Further, these results support Lefcourt's (1982) argument that "the development of internal control expectancies with its concomitant development of basic skills requires the kind of nurturant, protective home free of traumatic, incapacitating events that characterizes secure attachments" (p.137). Additionally, attachment insecurity may have a particularly negative effect on the development of an internal locus of control within the financial realm, as evidenced by the strong and significant negative indirect effect of attachment insecurity on the financial locus of control scale. This result underscores the importance of family relationships in the development of confidence that one can impact financial outcomes. Interventions programs which seek to improve the financial literacy of young adults should consider family relationship quality as they design their programs.

Impact of Locus of Control and Financial Communication

Regarding the direct relationships to the financial behavior latent outcome construct, both locus of control and financial communication had significant positive direct effect, as hypothesized. The path from locus of control to financial behavior was particularly strong. This is consistent with prior findings that the belief that one can impact outcomes increases the likelihood that action will be taken towards that outcome (Lefcourt, 1982; Bandura, 1977, 1997). It is also similar to the findings of Danes and Haberman (2007) examining self-efficacy, a similar

construct. The authors report concomitant increases in positive financial behavior and internal locus of control following participation in a personal finance curriculum. It is important to note that the locus of control construct in the current study also contained an economic locus of control scale as an indicator. It was included because general locus of control has been found to be a weak predictor of specific behaviors (Rotter, 1975). Thus, a context-specific measure was necessary to gather an accurate assessment of emerging adults' sense of control in personal finance. The strong relationship to financial behavior suggests that improving confidence in the financial arena through knowledge, skills, and experience is a promising avenue for intervention programs. The effectiveness of such an approach has already been demonstrated by Danes and Haberman (2007).

As hypothesized, the path from financial communication to financial behavior was positive and significant indicating that the communication of financial practice and knowledge by parents has a significant effect on behavior. This result should be considered in light of the significant negative relationship between attachment insecurity and parental financial communication. Taken together, the two relationships indicate that the quality of the parent-child relationship is critical to the development of sound financial practices in emerging adults.

Indirect Effects on Financial Behavior Indicators

An interesting trend was observed for the indirect effects on the financial behavior indicators from attachment insecurity, locus of control, and financial communication. Across all of these constructs, the greatest effects were observed for general management followed by cash management, with an intermediate level of effect for capital accumulation. Because many emerging adults are only just beginning the path to financial independence, it may be that their confidence and parental input are directed at behaviors in which they regularly engage. The

management of cash in the present and for the future is an area where more may have had experience and received guidance from parents. Taken together, these results suggest that improvements in savings and financial planning are promising opportunities for improving the financial behavior of emerging adults through increased parental financial socialization and increased confidence and perceived competence within the financial market.

Professional Implications

It is imperative that professionals consider the importance of family relationships in the financial socialization process. The negative impact of attachment insecurity on locus of control and on parental financial communication presents a challenge to those working in the field of personal finance. Though the general focus of personal financial planners and counselors is on the improvement of financial practice, this research illuminates the need for a broader focus. Certainly, financial counselors are able to provide some counseling to aid in these matters, but their knowledge and skills within the domains of family development and dynamics are limited. Previous research by Jorgensen and Savla (2010) has illuminated the importance of parental socialization, particularly in the realm of financial attitudes. However, as Gudmunson and Danes (2011) posit, the quality of the parent-child relationship may be an important mediating factor. Thus, it is important for these financial professionals to collaborate with other professionals, such as marriage and family therapists, who have more expertise in family processes. In doing so, the professional will augment the effectiveness of the information and knowledge they have provided to families because the delivery of that information from parent to child will be improved by the presence of a more secure bond between the two. Focusing on the parent-child relationship would also allow for the creation of a socialization environment where an internal

financial locus of control can develop. Both of these factors are important in any effort to improve family financial outcomes.

Similarly, professionals in the field of family relations, such as marriage and family therapists (MFTs), can have a dramatic impact on the likelihood of positive financial socialization and outcomes. MFTs have powerful therapeutic skills within the realm of family relationships and, according the findings reported here, also have the potential to improve the financial socialization process by way of improved family relationship quality. Unfortunately, many professionals in this field lack professional training in the realm of personal finance. It is important for MFTs to evaluate their ability to address problems related to personal finance (Jorgensen, Rappleyea, Taylor, & Butler, 2013). If they are unable to effectively address the issues, it is important that they refer clients to a financial professional. In addition, the results of this survey support collaboration with the financial professionals so that their services can be integrated to more effectively address client needs and improve outcomes. An example of one such collaboration is the Institute for Personal Financial Planning Clinic, the first clinic of its kind to offer "financial counseling blended with relational therapy services" (Institute for Personal Financial Planning, 2007). Providing these services collaboratively in the same location allows for the unique competencies and strengths of both fields to be combined for maximum benefit.

Research Implications

The results reported here have important implications for future research. Chief among these is the applicability of the Gudmunson and Danes (2011) conceptual model of family financial socialization. The strength of this model is its inclusion of both process and outcome variables, with multiple demonstrated pathways to financial outcomes. Though promising

support for the Gudmunson and Danes conceptual model was found in the current study, the model analyzed here is not comprehensive. Research examining other socialization processes and outcomes are necessary to have comprehensive confirmation of the model.

Secondly, the current research illuminates attachment security as an important factor in family financial socialization processes. To the author's knowledge, this is the first research to examine the role of attachment in financial management behavior. More research is necessary to illuminate the specific processes through which attachment security translates into financial capability, behavior, and well-being

Limitations

As with any research, there are limitations that apply to the current study. First, the sample in this study was a convenience sample from one university, limiting the generalizability of the results. Future studies examining the role of attachment in family financial socialization should examine these results with a larger and more geographically diverse sample. The sample was also largely white, limiting the applicability of these results to other racial or ethnic demographics. Given that demographic and family characteristics are an important part of the Gudmunson and Danes (2011) model, it is important for future research to consider the impact that these variables have on the processes leading from attachment to financial outcomes in emerging adults. The results reported here do not examine fit of the current model for different participants in different demographic categories. Such an analysis would have required a much larger sample with greater representation of participants with a non-Caucasian background than was available for this research. However, it is likely that the strengths of individuals from a particular background can have an impact on the relationships between the constructs considered

in the present study. More research is needed to illuminate the ways in which demographic characteristics effect the family relational processes of financial socialization.

The current study also presents results from a cross-sectional analysis. Since family financial socialization is a process thought to extend throughout the lifespan (Gudmunson & Danes, 2011), cross-sectional data does not allow for the identification of changes occurring over time. Given the transitional nature of the emerging adulthood developmental stage, longitudinal data would likely show significant changes in the relationships of many socialization processes over the course of the stage.

A third limitation of the present study is the lack of confirmed validity and reliability for some of the measures used in the present study. Although most were inspired by existing valid and reliable measures, survey length concerns necessitated that they be condensed. Though these altered measures likely still capture the constructs intended, their psychometrics have not been evaluated.

Conclusion

The limitations of the current study notwithstanding, there are several contributions to the family financial socialization literature. The current study is the first to illuminate the role of attachment security in financial socialization. The results demonstrate that attachment security impacts relational financial communication variables as well as intrapersonal financial capability variables. The impact of family relational processes on purposive financial socialization with the family is an understudied segment of family financial socialization theory (Gudmunson & Danes, 2011), and the current research illuminates a promising new avenue for understanding this important process. Overall, the findings reported here underscore the importance of family relationship quality in the financial socialization process.

The current study used structural equation modeling to confirm part of the Gudmunson and Danes (2011) conceptual model of family financial socialization. The full mediation of the direct relationship between attachment security and financial behavior by financial communication and locus of control also supports the construction of the conceptual model.

Results from the current study have implications for professionals in the field of personal finance as well as family relations. These professionals have unique skills that, according to the current results, both impact financial outcomes. The current study demonstrates the need for these professionals to collaborate to improve financial outcomes through the improvement of the financial socialization process.

REFERENCES

Bandura, A. (1977). Self-efficacy: Toward a unifying theory of behavioral change. *Psychological Review*, *84*(2), 191-215. doi:10.1037/0033-295X.84.2.191

Bandura, A. (1997). *Self-efficacy: The exercise of control*. New York: Freeman.

Bowlby, J. (1973). *Separation*. New York: Basic Books.

Bowlby, J. (1980). *Attachment and loss: Vol. 3. Loss, sadness, and depression*. New York: Basic Books.

Bowlby, J. (1982). *Attachment and loss: Vol. 1. Attachment* (2nd ed.). New York: Basic Books (originally published in 1969).

Danes, S. M., & Haberman, H. R. (2007). Teen Financial Knowledge, Self-Efficacy, and Behavior: A Gendered View. *Journal of Financial Counseling & Planning*, *18*(2), 48-60.

Emerson, E., Donenberg, G. R., & Wilson, H. W. (2012). Health-protective effects of attachment among African American girls in psychiatric care. *Journal of Family Psychology*, *26*(1), 124-132. doi:10.1037/a0026352

Gudmunson, C. G., & Danes, S. M. (2011). Family financial socialization: Theory and critical review. *Journal of Family and Economic Issues*, *32*(4), 644-667. doi:10.1007/s10834-011-9275-y

Institute for Personal Financial Planning. (2007). Financial therapy clinic. Retrieved from http://www.ipfp.k-state.edu/clinic/

Jorgensen, B. L., & Savla, J. (2010). Financial literacy of young adults: The importance of parental socialization. *Family Relations*, *59*(4), 465-478. doi:10.1111/j.1741-3729.2010.00616.x

Jorgensen, B. L., Rappleyea, D. L., Taylor, A. C., & Butler, J. L., IV. (in press). Developing a competency framework for MFTs in couple and financial counseling. *American Journal of Family Therapy*.

Lefcourt, H. M. (1982). *Locus of control: Current trends in theory and research* (2nd ed.). Hillsdale, NJ: Lawrence Erlbaum.

McNally, A. M., Palfai, T. P., Levine, R. V., & Moore, B. M. (2003). Attachment dimensions and drinking-related problems among young adults the meditational role of coping motives. *Addictive Behaviors*, *28*(6), 1115-1127. doi:10.1016/S0306-4603(02)00224-1

Rotter, J. B. (1975). Some problems and misconceptions related to the construct of internal versus external control of reinforcement. *Journal of Consulting and Clinical Psychology*, *43*(1), 56-67. doi:10.1037/h0076301

Shaver, P. R., & Mikulincer, M. (2007). Adult attachment strategies and the regulation of emotion. In J. J. Gross (Ed.), *Handbook of emotion regulation* (pp. 446-465). New York, NY US: Guilford Press.

Sroufe, L. A. (1979). The coherence of individual development: Early care, attachment, and subsequent developmental issues. *American Psychologist*, *34*(10), 834-841. doi:10.1037/0003-066X.34.10.834

APPENDIX A: APPROVAL LETTERS

Notification of Exempt Certification

EAST CAROLINA UNIVERSITY
University & Medical Center Institutional Review Board Office
1L-09 Brody Medical Sciences Building· Mail Stop 682
600 Moye Boulevard · Greenville, NC 27834
Office **252-744-2914** · Fax **252-744-2284** · **www.ecu.edu/irb**

Notification of Exempt Certification

From: Social/Behavioral IRB
To: Bryce Jorgensen
CC:

Date: 1/20/2012
Re: UMCIRB 12-000001
Understanding the Financial Capability of Emerging Adults

I am pleased to inform you that your research submission has been certified as exempt on 1/20/2012. This study is eligible for Exempt Certification under category #2.

It is your responsibility to ensure that this research is conducted in the manner reported in your application and/or protocol, as well as being consistent with the ethical principles of the Belmont Report and your profession.

This research study does not require any additional interaction with the UMCIRB unless there are proposed changes to this study. Any change, prior to implementing that change, must be submitted to the UMCIRB for review and approval. The UMCIRB will determine if the change impacts the eligibility of the research for exempt status. If more substantive review is required, you will be notified within five business days.

The UMCIRB office will hold your exemption application for a period of five years from the date of this letter. If you wish to continue this protocol beyond this period, you will need to submit an Exemption Certification request at least 30 days before the end of the five year period.

The Chairperson (or designee) does not have a potential for conflict of interest on this study.

IRB00000705 East Carolina U IRB #1 (Biomedical) IORG0000418
IRB00003781 East Carolina U IRB #2 (Behavioral/SS) IORG0000418 IRB00004973
East Carolina U IRB #4 (Behavioral/SS Summer) IORG0000418

Notification of Amendment Approval

EAST CAROLINA UNIVERSITY
University & Medical Center Institutional Review Board Office
1L-09 Brody Medical Sciences Building· Mail Stop 682
600 Moye Boulevard · Greenville, NC 27834
Office **252-744-2914** · Fax **252-744-2284** · **www.ecu.edu/irb**

Notification of Amendment Approval

From: Social/Behavioral IRB
To: Bryce Jorgensen
CC:

Date: 4/23/2012
Re: Ame1_UMCIRB 12-000001
UMCIRB 12-000001
Understanding the Financial Capability of Emerging Adults

Your Amendment has been reviewed and approved using expedited review for the period of 4/22/2012 to . It was the determination of the UMCIRB Chairperson (or designee) that this revision does not impact the overall risk/benefit ratio of the study and is appropriate for the population and procedures proposed.

Please note that any further changes to this approved research may not be initiated without UMCIRB review except when necessary to eliminate an apparent immediate hazard to the participant. All unanticipated problems involving risks to participants and others must be promptly reported to the UMCIRB. A continuing or final review must be submitted to the UMCIRB prior to the date of study expiration.The investigator must adhere to all reporting requirements for this study.

The approval includes the following items:

Name	Description	Modified	Version
Experiences in Close Relationships Scale-Revised (ECR-R)-Amendment 1 | History	Surveys and Questionnaires	4/10/2012 4:24 PM	0.01
Survey Consent Form- Revised 4/19/2012 | History	Consent Forms	4/19/2012 10:31 AM	0.01

The Chairperson (or designee) does not have a potential for conflict of interest on this study.

IRB00000705 East Carolina U IRB #1 (Biomedical) IORG0000418
IRB00003781 East Carolina U IRB #2 (Behavioral/SS) IORG0000418 IRB00004973
East Carolina U IRB #4 (Behavioral/SS Summer) IORG0000418

APPENDIX B: PERMISSION LETTERS

Publisher License to Reprint Figure

SPRINGER LICENSE
TERMS AND CONDITIONS

Apr 02, 2013

This is a License Agreement between John T Schweichler ("You") and Springer ("Springer") provided by Copyright Clearance Center ("CCC"). The license consists of your order details, the terms and conditions provided by Springer, and the payment terms and conditions.

All payments must be made in full to CCC. For payment instructions, please see information listed at the bottom of this form.

License Number	3120970556166
License date	Apr 02, 2013
Licensed content publisher	Springer
Licensed content publication	Journal of Family and Economic Issues
Licensed content title	Family Financial Socialization: Theory and Critical Review
Licensed content author	Clinton G. Gudmunson
Licensed content date	Jan 1, 2011
Volume number	32
Issue number	4
Type of Use	Thesis/Dissertation
Portion	Figures
Author of this Springer article	No
Order reference number	
Title of your thesis / dissertation	The financial behavior of emerging adults: A family financial socialization approach
Expected completion date	May 2013
Estimated size(pages)	75
Total	0.00 USD
Terms and Conditions	

Introduction
The publisher for this copyrighted material is Springer Science + Business Media. By clicking "accept" in connection with completing this licensing transaction, you agree that the following terms and conditions apply to this transaction (along with the Billing and Payment terms and conditions established by Copyright Clearance Center, Inc. ("CCC"), at the time that you opened your Rightslink account and that are available at any time at http://myaccount.copyright.com).

Limited License
With reference to your request to reprint in your thesis material on which Springer Science

and Business Media control the copyright, permission is granted, free of charge, for the use indicated in your enquiry.

Licenses are for one-time use only with a maximum distribution equal to the number that you identified in the licensing process.

This License includes use in an electronic form, provided its password protected or on the university's intranet or repository, including UMI (according to the definition at the Sherpa website: http://www.sherpa.ac.uk/romeo/). For any other electronic use, please contact Springer at (permissions.dordrecht@springer.com or permissions.heidelberg@springer.com).

The material can only be used for the purpose of defending your thesis, and with a maximum of 100 extra copies in paper.

Although Springer holds copyright to the material and is entitled to negotiate on rights, this license is only valid, subject to a courtesy information to the author (address is given with the article/chapter) and provided it concerns original material which does not carry references to other sources (if material in question appears with credit to another source, authorization from that source is required as well).

Permission free of charge on this occasion does not prejudice any rights we might have to charge for reproduction of our copyrighted material in the future.

Altering/Modifying Material: Not Permitted
You may not alter or modify the material in any manner. Abbreviations, additions, deletions and/or any other alterations shall be made only with prior written authorization of the author(s) and/or Springer Science + Business Media. (Please contact Springer at (permissions.dordrecht@springer.com or permissions.heidelberg@springer.com)

Reservation of Rights
Springer Science + Business Media reserves all rights not specifically granted in the combination of (i) the license details provided by you and accepted in the course of this licensing transaction, (ii) these terms and conditions and (iii) CCC's Billing and Payment terms and conditions.

Copyright Notice:Disclaimer
You must include the following copyright and permission notice in connection with any reproduction of the licensed material: "Springer and the original publisher /journal title, volume, year of publication, page, chapter/article title, name(s) of author(s), figure number(s), original copyright notice) is given to the publication in which the material was originally published, by adding; with kind permission from Springer Science and Business Media"

Warranties: None

Example 1: Springer Science + Business Media makes no representations or warranties with respect to the licensed material.

Example 2: Springer Science + Business Media makes no representations or warranties with respect to the licensed material and adopts on its own behalf the limitations and disclaimers established by CCC on its behalf in its Billing and Payment terms and conditions for this licensing transaction.

Indemnity
You hereby indemnify and agree to hold harmless Springer Science + Business Media and CCC, and their respective officers, directors, employees and agents, from and against any and all claims arising out of your use of the licensed material other than as specifically authorized pursuant to this license.

No Transfer of License
This license is personal to you and may not be sublicensed, assigned, or transferred by you to any other person without Springer Science + Business Media's written permission.

No Amendment Except in Writing
This license may not be amended except in a writing signed by both parties (or, in the case of Springer Science + Business Media, by CCC on Springer Science + Business Media's behalf).

Objection to Contrary Terms
Springer Science + Business Media hereby objects to any terms contained in any purchase order, acknowledgment, check endorsement or other writing prepared by you, which terms are inconsistent with these terms and conditions or CCC's Billing and Payment terms and conditions. These terms and conditions, together with CCC's Billing and Payment terms and conditions (which are incorporated herein), comprise the entire agreement between you and Springer Science + Business Media (and CCC) concerning this licensing transaction. In the event of any conflict between your obligations established by these terms and conditions and those established by CCC's Billing and Payment terms and conditions, these terms and conditions shall control.

Jurisdiction
All disputes that may arise in connection with this present License, or the breach thereof, shall be settled exclusively by arbitration, to be held in The Netherlands, in accordance with Dutch law, and to be conducted under the Rules of the 'Netherlands Arbitrage Instituut' (Netherlands Institute of Arbitration).***OR:***

All disputes that may arise in connection with this present License, or the breach thereof, shall be settled exclusively by arbitration, to be held in the Federal Republic of Germany, in accordance with German law.

Other terms and conditions:

v1.3

If you would like to pay for this license now, please remit this license along with your payment made payable to "COPYRIGHT CLEARANCE CENTER" otherwise you will be invoiced within 48 hours of the license date. Payment should be in the form of a check or money order referencing your account number and this invoice number RLNK500990779.
Once you receive your invoice for this order, you may pay your invoice by credit card. Please follow instructions provided at that time.

Make Payment To:
Copyright Clearance Center
Dept 001
P.O. Box 843006
Boston, MA 02284-3006

For suggestions or comments regarding this order, contact RightsLink Customer Support: customercare@copyright.com or +1-877-622-5543 (toll free in the US) or +1-978-646-2777.

Gratis licenses (referencing $0 in the Total field) are free. Please retain this printable license for your reference. No payment is required.

Permission from Author to Reprint Figure

From: Gudmunson, Clinton G [HD FS] [cgudmuns@iastate.edu]
Sent: Monday, March 18, 2013 10:21 AM
To: Schweichler, John Thomas
Subject: RE: Reprint Permission Request

John,

Thank you, I am glad that the model can be of use to you. Yes, you have my permission to reproduce it. Your project sounds very interesting, I would love to read your master's thesis when completed. It sounds like your work would be a great fit for the *Journal of Financial Therapy*. Have you published in this journal or considered publishing there? We need more MFTs who also understand family financial matters. When you or your adviser have need of more data for similar work please check out *Flourishing Families* they added many financial measures when the 2008 recession hit, even though it is mostly a family study—and they have attachment. My guess is that parts of your model could be replicated in this dataset. I am working with the BYU team that runs the project to make better use of the financial variables. I have been looking for an opportunity to talk to Bryce about this—please let him know for me.

I have attached the model—I think this is the final version that went in the 2011 paper.

Best,

Clinton G. Gudmunson, PhD
Assistant Professor
Human Development and Family Studies
Iowa State University
4380 Palmer Building, Suite 1323
Ames, IA, 50011

From: Schweichler, John Thomas [mailto:SCHWEICHLERJ11@students.ecu.edu]
Sent: Saturday, March 16, 2013 4:33 PM
To: cgudmuns@iastate.edu
Cc: Jorgensen, Bryce
Subject: Reprint Permission Request

Hi Dr. Gudmunson,

My name is John Schweichler and I am a graduate student in the Marriage and Family Therapy program at East Carolina University. I'm currently working on my master's thesis with Bryce Jorgensen. My thesis is examining the role of attachment insecurity, locus of control, and parental financial communication in financial behavior. I plan to use family financial socialization theory and your conceptual model of it to guide my project. As you called for in your 2011 article, I am utilizing structural equation modeling to examine the relationships

between these variables.

I'm contacting you to ask for your permission to reprint, as part of my master's thesis and potentially as part of a subsequent publication, Figure 1 (See bottom of email) of your 2011 article entitled "Family Financial Socialization:Theory and Critical Review" in the *Journal of Family and Economic Issues*. The figure depicts a conceptual model of family financial socialization processes and outcomes.

If you would like, I would be happy to share the findings of my thesis with you upon completion. Thank you for considering my request.

Sincerely,

John

_____

John Schweichler
Marriage and Family Therapy Intern
East Carolina University

APPENDIX C: MEASURES

Experiences in Close Relationships- Revised

The ECR-R scale was utilized in this study to evaluate the attachment orientation of participants. The ECR-R measures attachment along two axes: avoidance and anxiety. During administration, the scale was presented with all 36 items present and was not divided as it is below. However, for ease of presentation the scale is split into the anxiety and avoidance subscales below. Each question was answered on a seven-point Likert-type scale from "Strongly Disagree" to "Strongly Agree". Reverse-scored items are labeled with "**(R)**".

Instructions:
The statements below concern how you feel in close relationships with others. We are interested in how you generally experience relationships, not just what is happening in a current friendship or romantic relationship. Please indicate the extent to which you agree or disagree with each statement.

Anxiety

1. I'm afraid that I will lose the love of people that I feel close to.
2. I often worry that people I feel close to will not want to stay with me.
3. I often worry that people I feel close to don't really love me.
4. I worry that other people won't care about me as much as I care about them.
5. I often wish that other people's feelings for me were as strong as my feelings for them.
6. I worry a lot about my friendships and/or relationships.
7. When I'm apart from people I feel close to, I worry that they might lose interest in being close to me.
8. When I show my feelings for people I feel close to, I'm afraid they will not feel the same about me.
9. I rarely worry about people I feel close to losing interest in me. **(R)**
10. My friends and/or significant other make me doubt myself.
11. I do not often worry about being abandoned. **(R)**
12. I find that people I want to be close to don't want to get as close as I would like.
13. Sometimes people I feel close to change their feelings about me for no apparent reason.
14. My desire to be very close sometimes scares people away.
15. I'm afraid that once someone gets to know me, he or she won't like who I really am.
16. It makes me mad that I don't get the affection and support I need from people I feel close to.
17. I worry that I won't measure up to other people.
18. The people I feel close to only seem to notice me when I'm angry.

Avoidance

1. I prefer not to show friends or significant others how I feel deep down.
2. I feel comfortable sharing my private thoughts and feelings with people to whom I feel close. **(R)**
3. I find it difficult to allow myself to depend on others.
4. I am very comfortable being close to others. **(R)**
5. I don't feel comfortable opening up to others.

6. I prefer not to be too close to others.
7. I get uncomfortable when other people want to be very close.
8. I find it relatively easy to get close to others. **(R)**
9. It's not difficult for me to get close to others. **(R)**
10. I usually discuss my problems and concerns with those I feel close to. **(R)**
11. It helps to turn to people I feel close to in times of need. **(R)**
12. I tell those I feel close to just about everything. **(R)**
13. I talk things over with those I feel close to. **(R)**
14. I am nervous when others get too close to me.
15. I feel comfortable depending on friends or romantic partners. **(R)**
16. I find it easy to depend on friends or romantic partners. **(R)**
17. It's easy for me to be affectionate with friends or romantic partners. **(R)**
18. My friends or significant other really understand me and my needs. **(R)**

Locus of Control Measures

Two measures were utilized to capture the locus of control latent construct in the current study, general locus of control and financial locus of control. The instructions for both measures were "Please rate your agreement with the following statements." For each item in both measures participants responded on a four-point Likert-type scale ranging from "strongly disagree" to "strongly agree". Total sum scores were computed for both measures. Reverse scored items are indicated by "**(R)**".

General Locus of Control

1. When I make plans, I am almost certain that I can make them work.
2. Many times, I feel that I have little influence over the things that happen to me. **(R)**
3. What happens to me is my own doing.
4. Whatever has happened to me in life, I can still choose my own future.
5. I believe my future depends on me, not others.

Financial Locus of Control

1. I feel in control of my financial situation.
2. I feel confident about my ability to manage my own finances.
3. I feel capable of using my future income to achieve my financial goals
4. I am good at dealing with day-to-day financial matters, such as checking accounts, credit and debit cards, and tracking expenses

Financial Communication Scales

Two measures were employed to capture elements of the parental financial communication construct, the direct financial communication scale and the indirect financial communication scale. Each consisted of 15-items with four-point Likert-type scales ranging from "never" to "always". Responses to these items were summed to give a total score, with higher scores indicating greater direct or indirect financial communication. These scales were created for the current study.

Direct Financial Communication Scale

Instructions:

Please indicate the extent to which you think your parents DIRECTLY/EXPLICITLY taught you about the following topics.

1. Budgeting
2. Bank Accounts (e.g., savings or checking)
3. Investing
4. Taxes deducted from paychecks
5. Building good credit
6. Medical insurance
7. Life insurance
8. Auto insurance
9. Renter's/Homeowner's insurance
10. Loans/Debts
11. Credit cards
12. Saving
13. Giving to charities
14. Work for what you receive
15. Distinguishing between needs and wants

Indirect Financial Communication Scale

Instructions:

Please indicate the extent to which you INDIRECTLY/IMPLICITLY learned about the following topics.

1. Budgeting
2. Bank Accounts (e.g., savings or checking)
3. Investing
4. Taxes deducted from paychecks
5. Building good credit
6. Medical insurance
7. Life insurance
8. Auto insurance
9. Renter's/Homeowner's insurance
10. Loans/Debts
11. Credit cards
12. Saving
13. Giving to charities
14. Work for what you receive
15. Distinguishing between needs and wants

Financial Management Behavior Scales

The following subscales were utilized to capture four domains of financial management behavior: cash management, credit management, capital accumulation, and general management. The scales were modeled after those proposed by Porter and Garman (1993). Most items were 4-point Likert-scales with responses ranging from "Never" to "Always". Two items within the credit management scale were 5- and 7-point Likert-type items and their responses have been included below. Reverse-scored items are designated with "**(R)**".

Cash Management

1. I used a weekly/monthly budget to track my income and expenses.
2. I overdraw my account and am charged a fee from my bank **(R)**
3. I paid all my bills on time in the past year.

Credit Management

1. I am comfortable with not paying my credit card bills in full each month as long as I make the minimum payment. **(R)**
2. I spend more than I earn. **(R)**
3. I have used a pay day loan service. **(R)**
    a. Never
    b. At least once
    c. 2-5 Times
    d. 6-10 Times
    e. More than 10 times/ Regularly
4. How many credit cards do you have? **(R)**
    a. None
    b. One
    c. Two
    d. Three
    e. Four
    f. Five to Nine
    g. Ten or more

Capital Accumulation

1. I save or invest money out of each paycheck.
2. I invest money across more than one type of investment.

General Management

1. I review my total financial situation.
2. I contribute money to a savings account used for emergencies only.
3. I save for long term goals such as a car.